Perfect Sun® 16D DTT System

DANGER Ultraviolet radiation. Follow instructions. Avoid overexposure. As with natural sunlight, overexposure can cause eye and skin injury and allergic reactions. Repeated exposure may cause premature aging of the skin and skin cancer. WEAR PROTECTIVE EYEWEAR; FAILURE TO MAY RESULT IN SEVERE BURNS OR LONGTERM INJURY TO THE EYES. Medications or cosmetics may increase your sensitivity to the ultraviolet radiation. Consult physician before using sunlamp if you are using medications or have a history of skin problems or believe yourself especially sensitive to sunlight. If you do not tan in the sun, you are unlikely to tan from the use of this product. Children, the elderly, or fair skinned people who always burn easily and either never tan or tan minimally should not use this equipment.

To use, lie down on bench and pull canopy down as far as adjustment will allow. Do not use without clear plastic panels in place. Untanned persons should not tan on consecutive days during their first week of tanning. Never tan more than once a day. Tanning normally appears after the first few sessions and maximizes after approximately four weeks. Tan once or twice per week thereafter to maintain appearance. Persons already having a base tan may begin at advanced levels corresponding to the extent of their base tan.

Skin Type:

I **Sensitive Skin** (Burns easily and severely and does not tan.)
II **Light Skin** (Burns easily and severely and tans minimally.)
III **Normal Skin** (Burns moderately and tans average.)
IV **Dark Skin** (Burns minimally, tans easily and above average.)

RECOMMENDED EXPOSURE TIMES IN MINUTES

Skin Type:	Level 1/Week 1 1st-3rd Sessions	Level 2	Level 3	Level 4	Level 5
I Sensitive	NOT RECOMMENDED FOR TANNING				
II Light	4	8	12	16	20
III Normal	6	10	15	20	20
IV Dark	8	12	16	20	20

MAXIMUM EXPOSURE TIME IS 20 MINUTES

New lamps emit approximately 10% more ultraviolet radiation during the first 50 hours of operation. Recommended tanning times should therefore be reduced by approximately 10% during that period.

WARNING: • Read these instructions before using this sunlamp product. • All persons in the room should wear protective eyewear when lamps are on. Recommended eyewear: provided eyeshields or equivalent eyewear as defined under 21 CFR 1040.20. Other types of eyewear may not provide adequate protection. Failure to use protective eyewear may result in severe burns or other eye injury. If discomfort develops, discontinue use and consult a physician.

THE FOLLOWING LAMPS HAVE BEEN CERTIFIED FOR USE IN THE 16D:

DARK TAN® II Wolff® Model DTII 71-T12 100W BI-PIN (❍ below)
DARK TAN® Wolff® Model DT71-T12-100W BI-PIN (⊙ below)
DARK TAN® Dual Twist Model DTDT 71-T12-100W BI-PIN (● below)

DISCONNECT POWER CORD BEFORE ATTEMPTING TO CLEAN, RELAMP, OR ENGAGE IN THE MAINTENANCE OF THIS PRODUCT.

THIS EQUIPMENT MUST BE EARTH GROUNDED.

This product is in conformity with performance standards for sun lamp products under 21 CFR PART 1040.20 and ANSI/UL Standard 482.

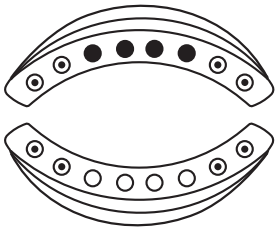

INTERTEK ETL LISTED US
88465

⚠ DANGER

Shock hazard.

Disconnect power before servicing or removing any protective covers.

Do not operate this device near water or while you are wet.

⚠ DANGER

Some medications may increase your sensitivity to ultraviolet light. It is recommended that you consult a physician before using this sunbed if taking any medication or if you suspect that your skin might be especially sensitive to sunlight.

⚠ WARNING

Wear protective eyewear.

Failure to may result in severe burns or longterm injury to the eyes.

⚠ CAUTION

Air from the room is used to cool the sunbed. Maximum ambient room temperature should be 80°F. Place your sunbed no closer than 6" from any wall. Make sure nothing obstructs the airflow into the sunbed's endcaps or out of the fan openings. A poorly ventilated room may cause the unit to become hot and cause discomfort to the user.

Electrical Requirements

Your sunbed operates from a **120V AC** source. You should have a **NEMA 5-15R** electrical outlet (below), on a dedicated circuit capable of providing **15 Amp** service, installed in the room in which you will use the unit. We recommend installation by a professional electrician. The outlet must be earth grounded.

15 AMP NEMA #5-15R RECEPTACLE

Unpacking and Inspection

The canopy box contains the canopy and a pair of gas springs. The bench box contains the bench, assembly hardware, stand legs and skirt. Inspect the items and make sure they are free from any visible damage. Report the extent of any damage to the transportation company.

Hardware Inventory (These items, Velcro® and a small pillow)

Allen-head Bolt 5/16″ x 1″
Quantity 2

5/16″ Metal Washer
Quantity 2

Bushing
Quantity 2

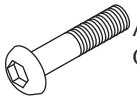

Allen-head Bolt 5/16″ x 1 1/2″
Quantity 2

Nylon Washer
Quantity 2

Star Lock Washer
Quantity 8

#10-32 x 1/2″ Screw
Quantity 8

Skirt Retaining Bracket
Quantity 8

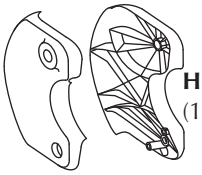

Hinge Brackets
(1) left, (1) right

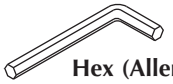

Hex (Allen) Wrench
Quantity 1

Safety Goggles
Quantity 1

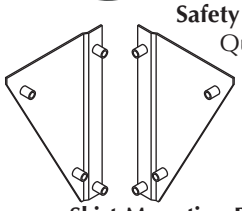

Skirt Mounting Bracket
Quantity 1-left, 1-right

Assembly Procedures

1
Lay the bench upside down on the floor. Locate the two stand legs.

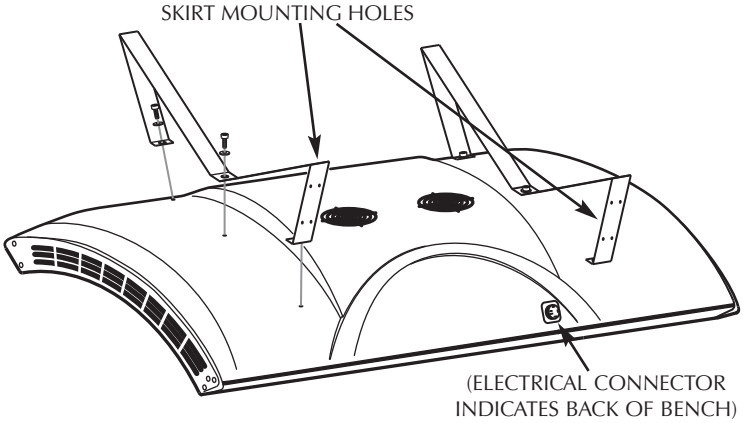

2
Remove the six 5/16″ x 1″ bolts and 5/16″ washers installed in the bench. Attach the stand legs, <u>with the four small skirt mounting holes toward the back</u>, by installing the center bolt first. You may have to gently push the sides of the legs in to align holes. Tighten with the Allen wrench.

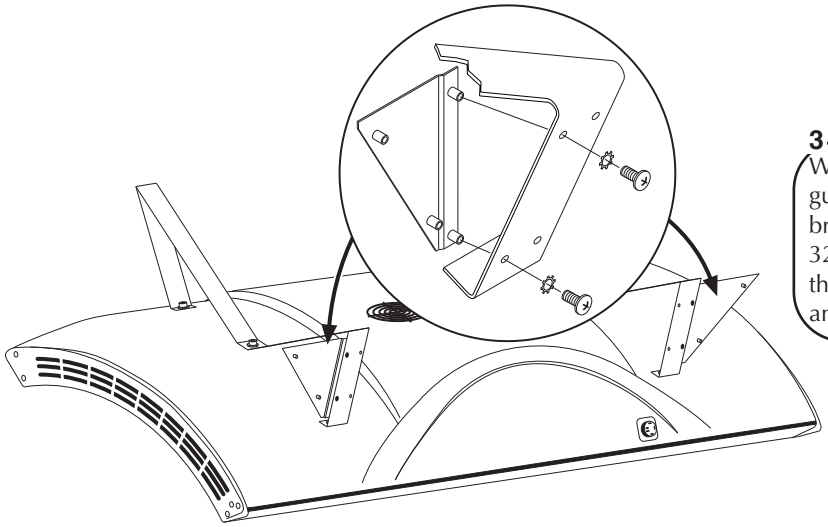

3
While the bench is upside-down attach the triangular skirt mounting brackets. Locate the two brackets and attach them as shown with two #10-32 x 1/2″ screws and star lock washers. Make sure the threaded inserts point toward the stand legs and the wide end is toward what will be the floor.

4
Attach the side skirts to the mounting brackets with two #10-32 x 1/2″ screws and star lock washers from inside the skirt and into the brackets. The rounded part of the side skirts points toward the front of the bed.

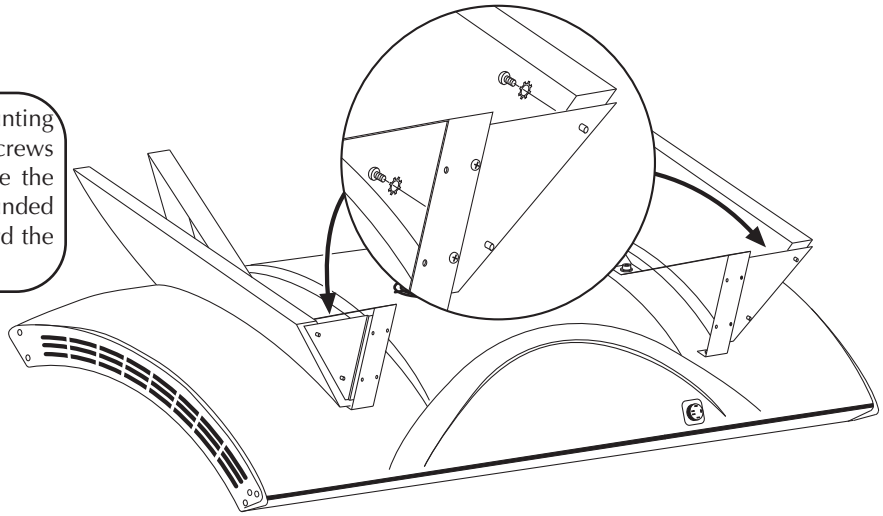

5
The front skirt panel is held in place by adhesive backed Velcro® strips. Clean each place the adhesive will touch with rubbing alcohol (see right). Peel off the backing paper from the two large pieces and adhere them to the stand legs. Stick a long, narrow strip on each side of the side skirts in the indentation. The last piece attaches the tab on the top of the front skirt to the bottom of the bench cover.

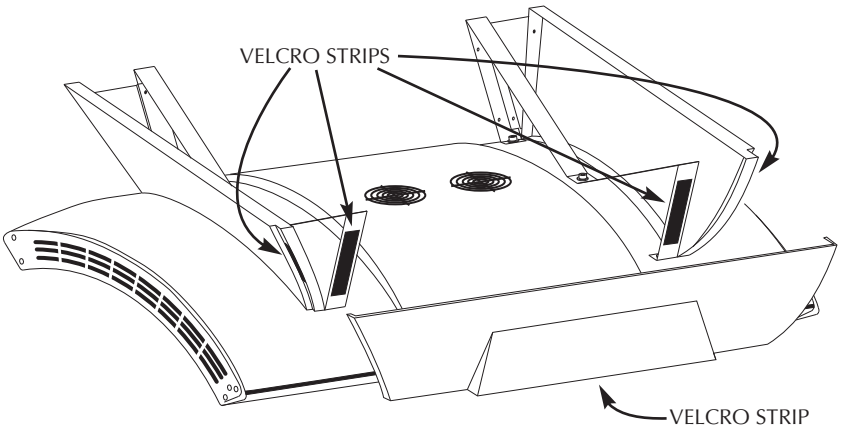

6
Peel the remaining backing paper from the Velcro strips and press the front skirt in place.

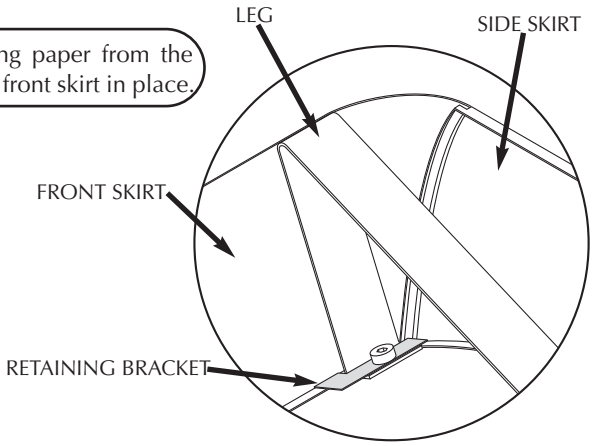

7
Using the front leg mounting bolt, secure the L-shaped Skirt Retaining Bracket so it clamps the front and side skirt to the bench cover. Place the retainer bracket so the tab holds the front skirt as shown. Repeat for the other side.

8
Turn bench over. Install hinge brackets to ends of bench such that the short boss engages the stud above the bolt hole, and the long boss engages the hole below the bolt hole. Secure using 5/16″ x 1″ Allen-head bolts and 5/16″ metal washers. Tighten bolt snug, then an additional half turn.

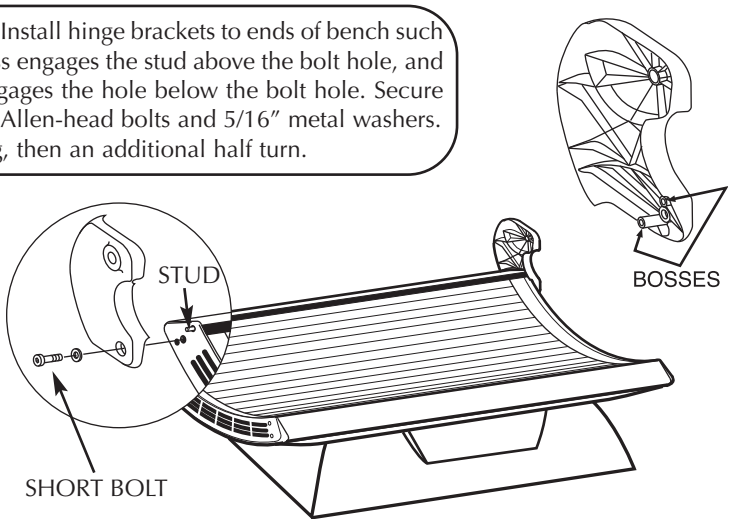

9
Place the bushings into hinge brackets.

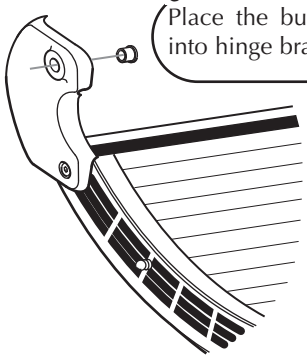

10
Lift the canopy and hold it between the hinge brackets.

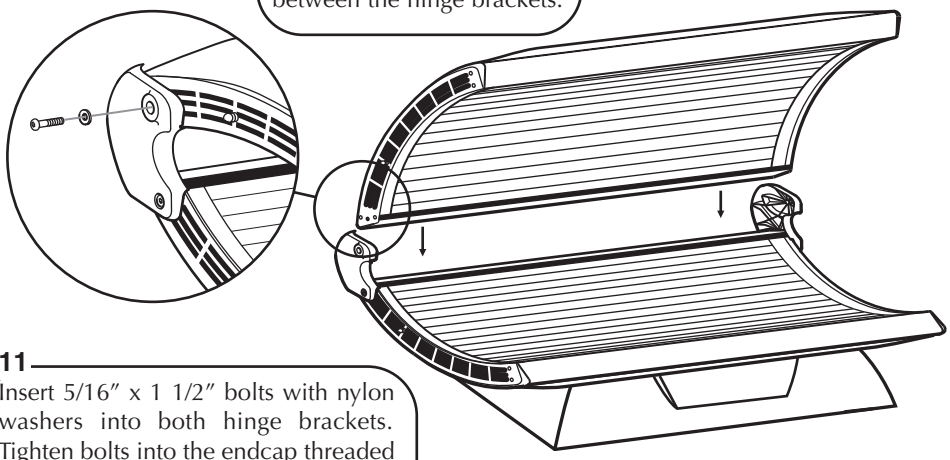

11
Insert 5/16″ x 1 1/2″ bolts with nylon washers into both hinge brackets. Tighten bolts into the endcap threaded inserts until snug, then an additional half turn. Do not overtighten to avoid damaging threaded inserts.

12
The gas springs have a locking mechanism. Follow the directions below for the type you received.

Type 1
Pry back the locking clip with a flat screwdriver.

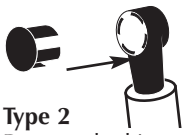

Type 2
Remove locking clip to install or remove gas spring.

13
With a helper holding the canopy open, align ends of gas spring ball joints with pivot studs and push into place. Be sure rod end is down as shown. DO NOT lower canopy until both gas springs are engaged!

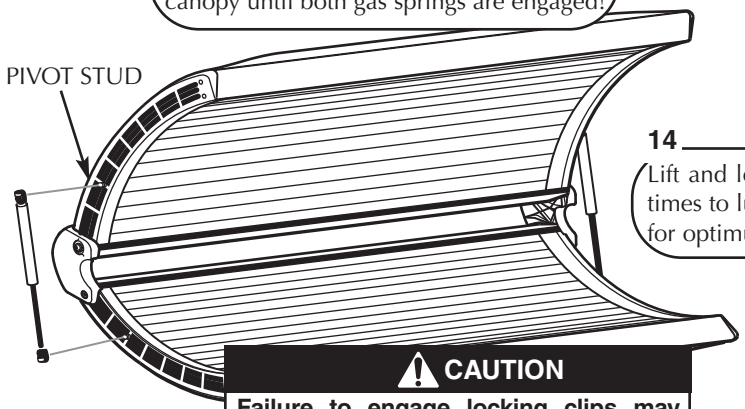

14
Lift and lower canopy a few times to lubricate gas springs for optimum performance.

⚠ CAUTION
Failure to engage locking clips may result in the ball joints working loose, allowing the canopy to fall, which may result in damage to the unit and injury.

15
Connect the canopy to bench power cord to the bench receptacle. Align the terminals and firmly push on until seated then tighten the threaded locking ring.

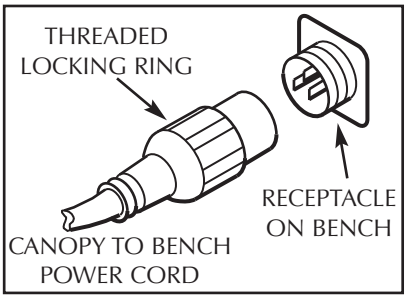

16
Plug the three-prong 120V AC power cord into a dedicated outlet (see *Electrical Requirements*).

Using Your Sunbed

Before using your sunbed, please note the following:

- Your skin should be free of cosmetics, tanning oils, or other body lotions prior to tanning except for those specifically made for use with tanning devices. However, do not remove natural body oils by bathing or showering immediately before tanning.
- Keep treated hair from contacting sunbed surfaces. Many hair products can damage the sunbed acrylic. Wear a shower cap or towel if you use gels, mousses, sprays, or other hair products.
- Your sunbed is designed for individual use. Always wear the safety goggles supplied with your sunbed or another approved pair of goggles, as defined under 21 CFR 1040.20. Regular sunglasses do not provide adequate protection from ultraviolet light.

Exposure Times

Follow the guidelines for skin type and exposure times as shown in the table below. Untanned persons should not tan on consecutive days during their first week of tanning. Never tan more than once a day. Tanning normally appears after the first few sessions and maximizes after approximately four weeks. Tan once or twice per week thereafter to maintain appearance. Persons already having a base tan may begin at advanced levels corresponding to the extent of their base tan.

Skin Type:

I **Sensitive Skin** (Burns easily and severely and does not tan.)
II **Light Skin** (Burns easily and severely and tans minimally.)
III **Normal Skin** (Burns moderately and tans average.)
IV **Dark Skin** (Burns minimally, tans easily and above average.)

RECOMMENDED EXPOSURE TIMES IN MINUTES					
Skin Type:	Level 1/Week 1 1st-3rd Sessions	Level 2	Level 3	Level 4	Level 5
I Sensitive	NOT RECOMMENDED FOR TANNING				
II Light	4	8	12	16	20
III Normal	6	10	15	20	20
IV Dark	8	12	16	20	20
MAXIMUM EXPOSURE TIME IS 20 MINUTES					

Operation

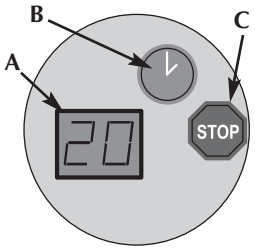

A **Timer display** - *Displays remaining time.*

B **Timer button** - *Turns bed on. Timer display shows remaining time. If a lesser time is desired, press timer button until desired time is displayed.*

C **Stop button** - *Interrupts tanning session.*

1. Press the timer button (B) to begin the tanning session. The timer display (A) displays the remaining time. The lamps will turn on and the timer will begin to count down from the maximum tanning session time. If a tanning time less than the displayed time is desired repeatedly press the timer button (B) to decrease the remaining time.
2. Lift the canopy, lie down on the bench (face up), lower the canopy as close to your body as possible, with no less than 2" between the canopy acrylic and your body.
3. When the timer reaches "0" the lamps turn off. If you want to stop your session before time expires, press the stop button (C).
4. Raise the canopy by pushing the outer edge of the canopy.

Care and Maintenance

Cleaning After Use

Clean and disinfect your tanning bed's bench and canopy after each use. Use a non-abrasive disinfectant cleaner that **does not contain ammonia or ammonia derivatives**. Ammonia may damage the acrylic shield. Spray the acrylic lightly with disinfectant and wipe dry with a clean soft cloth.

Thorough Periodic Cleaning

The cooling fans draw air through the bed and will cause a dust buildup on the lamps and reflectors. When a dust buildup is observed, it is necessary to thoroughly clean the inside of the bench and canopy.

1 Remove the acrylic shields and lamps.
2 With a soft cloth, wipe the entire length of each lamp.
3 Clean both sides of the acrylic shields with a non-ammonia disinfectant cleaner.
4 Wipe the reflectors with a clean damp cloth.
5 Re-install the lamps and acrylic shields.

Mechanical Inspection

Inspect the unit's mechanical integrity every 400-500 hours of use.

- Inspect the unit's fasteners verifying that all are firmly in place. Pay particular attention to the hinge bolts.
- Inspect gas springs for signs of wear. Replace gas springs that will not hold the canopy in the full open position when raised.
- Inspect the AC power cord and its connections.
- Inspect the acrylic. Replace if broken, cracked or badly scratched.

Hour Counter

This sunbed incorporates an ingenious hour counter function into the timing circuitry. It allows the operator of the unit to monitor the hours of use of the lamps, making it easy to determine when to change them. You may also decide to use this function to monitor other time based maintenance tasks.

To determine how many hours the unit has been in service (since the last reset of the hour counter memory), first make sure the timer display shows "0". Then simply hold the stop button for three seconds. The display will show two pairs of numbers which indicate the number of hours of service, then return to "0". (example: Display shows 08 then 54. This equals 854 hours.) NOTE: If the unit is connected to a T-Max® remote device, it may briefly lose communication with the remote. This is normal.

To erase the indicated hours, disconnect power from the sunbed. Press and hold the green timer button as you reconnect power. Release the button after a few seconds.

Removing/Replacing Acrylic Shields

The acrylic shields are secured in place by hinged profiles which run the length of the bed, both front and back. Simply pry up on the inside edge of the profile until it releases its latching action (see figure below). Continue to pry up the profile across its entire length until it swings back freely. Repeat for the other profile. The long edges of the acrylic shield are now exposed. Standing in front of the sunbed, grasp the long exposed edge of the acrylic and carefully slide it toward you until it is removed.

After changing the lamps, replace the acrylic shields by reversing the above directions. Close the hinged profile by pushing it back into place until it snaps tight.

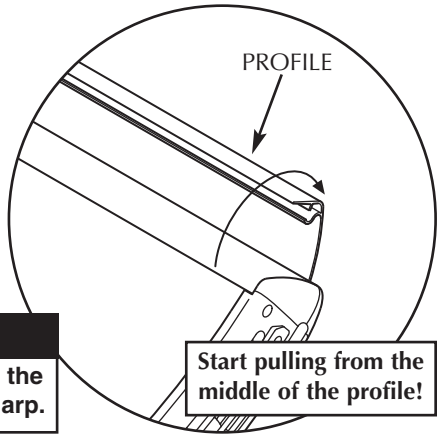

⚠ CAUTION

Be careful. The edges of the acrylic shield may be sharp.

Removing/Replacing Lamps

To be assured of maximum tanning effectiveness, change lamps after approximately 800-1000 hours of use. Tanning will continue after this time but at a slower rate. To ensure trouble-free operation of your sunbed, replace the lamp starters whenever the lamps are replaced. We recommend using the lamps specified below. Use of uncertified lamps is a violation of Federal regulations and will void your warranty.

1 Grasp a lamp at one end and at the middle, then turn the lamp a quarter turn. The lamp may then be gently removed from its holder.
2 To reinstall lamp, insert pins on the ends of the lamp into the slots on top of the lamp holder and turn the lamp a quarter turn.

The following lamps have been certified for use in the 16D:
DARK TAN® II Wolff® Model DTII 71-T12 100W BI-PIN (❍ below)
DARK TAN® Wolff® Model DT71-T12-100W BI-PIN (⊙ below)
DARK TAN® Dual Twist Model DTDT 71-T12-100W BI-PIN (● below)

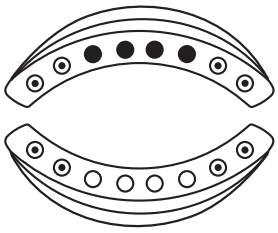

Problem / Solution	Troubleshooting
Sunbed not tanning 1. Clean sunbed, see *Thorough Periodic Cleaning*. 2. Replace lamps if lamp hours are greater than 800hrs. 3. Replace acrylic.	
Lamps fail to light and timer display is blank 1. Check source of AC power. Reset circuit breaker or replace fuse if necessary. 2. Make sure the unit is plugged into outlet. 3. Make sure canopy to bench cord is properly connected.	
One or more lamps fail to light 1. Check that lamp is installed correctly. 2. Switch unlit lamp with a lamp that lights. If the new lamp lights and the old lamp still does not, replace old lamp.	
The canopy will not stay up **NOTE:** Gas springs are manufactured to hold the canopy in its fully open position as well as allow it to rest fully closed. If left open for an extended period of time some creep down may occur. This is considered normal. Keep the unit closed when not in use. If the canopy will not stay fully open when raised... 1. Raise and lower the canopy a few times to lubricate gas spring internal seals. 2. Replace gas springs.	
Sunbed does not stay lit Check source of AC power. Reset circuit breaker or replace fuse if necessary.	

If you did not find the solution to your problem above, contact your place of purchase for additional assistance

Perfect Sun® 18 MONTH WARRANTY

Perfect Sun® warrants your tanning unit to be free of structural defects in material and workmanship, under normal use, for its lifetime. **Perfect Sun®** will, at its discretion, repair any structural defect which materially affects the performance of the tanning unit, or replace the tanning unit.

For eighteen (18) months following the shipping date of your tanning unit, **Perfect Sun®** will provide replacements for parts that prove to be defective in material or workmanship. Fluorescent lamps, and lamp starters are warranted against manufacturer's defects for a period of ninety (90) days following the shipping date of your tanning unit. Acrylics will be warranted against manufacturer's defects for a period of 1 year (prorated).

Labor costs associated with repair or replacement work covered by this warranty will be reimbursed for repair or replacement work required to be performed for a period of six (6) months following the shipping date of your tanning unit. All such warranty service must be performed by an authorized **Perfect Sun®** service person. All labor charges must be authorized by **Perfect Sun®** prior to the start of repairs and must not exceed the established rates and time allotment policies established by **Perfect Sun®**. If your tanning unit must be returned for service, all freight charges shall be at your expense.

Normal wear and tear, damage from misuse or abuse, damage incurred in transit or damages resulting from unauthorized repairs or modifications are not covered by this warranty. Warranty coverage does not include cosmetic abnormalities such as scratches, nicks, dents, or other cosmetic changes that do not materially interfere with the function of the tanning unit.

THIS STANDARD 18 MONTH WARRANTY IS EXPRESSLY MADE IN LIEU OF ANY OTHER WARRANTIES, EXPRESS OR IMPLIED, INCLUDING ANY IMPLIED WARRANTIES OF MERCHANTABILITY AND FITNESS FOR A PARTICULAR PURPOSE, WHICH ARE HEREBY DISCLAIMED. No one has the authority to change or modify this Standard 18 Month Warranty in any respect. To obtain service under this Standard 18 Month Warranty, contact **Perfect Sun®** at **1-800-361-5170** or visit **www.PerfectSunTanning.com** to fill out an online warranty request form.

IN NO EVENT SHALL YOUR DISTRIBUTOR OR THE MANUFACTURER BE LIABLE AT LAW OR IN EQUITY FOR ANY LOSS, LIABILITY, DAMAGE OR EXPENSE IN AN AMOUNT IN EXCESS OF THE PURCHASE PRICE RECEIVED, OR FOR LOSS OF USE OR PROFITS, LOSS OF TIME, INCONVENIENCE, RENTAL OR SUBSTITUTE PRODUCTS, LOSS OF BUSINESS, LOSS OF INCOME, OR ANY OTHER INCIDENTAL, INDIRECT, SPECIAL OR CONSEQUENTIAL DAMAGES. Some states do not allow the exclusion or limitation of incidental or consequential damages, and the above limitation or exclusion will not apply to residents of some states. This Standard 18 Month Warranty gives you specific, legal rights and you may have other rights which may vary from state to state.

Contact **Perfect Sun®** for the authorized Service Center nearest you. This warranty is serial number specific and only applies to tanning units purchased through an authorized **Perfect Sun®** Dealer. This warranty is extended to the individual or legal entity whose name appears on the original sales document and may not be transferred to any other individual or legal entity. This warranty is void if the tanning unit is modified in any manner from its original design.

To file a Warranty Claim, please follow these steps:

1. Locate the silver serial number label, located on the back of the unit near the power cord on the canopy. Identify the **serial number** and **model number** of the unit.
2. Proof of purchase must be provided before any claim will be considered.
3. Contact **Perfect Sun**® at **1-800-361-5170** or visit **www.PerfectSunTanning.com** to fill out an online warranty form.
4. If it is determined that a defective part needs to be replaced, **Perfect Sun**® will arrange for the pick-up or shipment of the replacement part.

Record this information for ease of service:

Date of purchase: _____

Bench serial number: _____

Canopy serial number: _____

Proudly manufactured in the U.S.A.