SunQuest®

Pro 24RS / 24RSF

USER MANUAL

25800-01A

25800-01A

Welcome

Congratulations on your purchase of this technologically advanced sun tanning unit. It has been designed to provide years of dependable service for you.

Please read all the instructions in this booklet before installing and using the unit. Always be sure to observe all safety precautions.

Contents

Safety Information . . . . . ***ii***

Installation **1**
- Unpacking and Inspection 1
- Pre-Installation Planning 2
- Assembly Procedures 3
- Making Electrical Connections 8

Operation **9**
- Before You Tan 9
- Exposure Times 9
- Parental Lock 10
- Using Your Sunbed 11

Care and Maintenance **12**
- Cleaning After Use 12
- Thorough Periodic Cleaning 12
- Mechanical Inspection 12
- Replacing Lamps 13
- Timer Maintenance 16

Troubleshooting **17**

Warranty Information . . . . . **inside back cover**

Obtaining Service . . . . . **back cover**

Safety Information

LABELING NOTICE: Labels are affixed on all systems to inform the user of possible dangers. Regulations are stated in 21 CFR, Section 1040.20, and require that all products manufactured after September 8, 1986 which use sunlamps must display the following:

DANGER Ultraviolet radiation. Follow instructions. Avoid overexposure. As with natural sunlight, overexposure can cause eye and skin injury and allergic reactions. Repeated exposure may cause premature aging of the skin and skin cancer. WEAR PROTECTIVE EYEWEAR; FAILURE TO MAY RESULT IN SEVERE BURNS OR LONGTERM INJURY TO THE EYES. Medications or cosmetics may increase your sensitivity to the ultraviolet radiation. Consult physician before using sunlamp if you are using medications or have a history of skin problems or believe yourself especially sensitive to sunlight. If you do not tan in the sun, you are unlikely to tan from the use of this product. Children, the elderly, or fair skinned people who always burn easily and either never tan or tan minimally should not use this equipment.

To use, lie down under canopy and pull down as far as adjustment will allow. Minimum use distance from face tanner (if equipped) is 1 inch (2.5 centimeters). Minimum use distance elsewhere is touching the clear plastic panels. Do not use without clear plastic panels in place. Untanned persons should not tan on consecutive days during their first week of tanning. Never tan more than once a day. Tanning normally appears after the first few sessions and maximizes after approximately four weeks. Tan once or twice per week thereafter to maintain appearance. Persons already having a base tan may begin at advanced levels corresponding to the extent of their base tan.

RECOMMENDED EXPOSURE TIMES IN MINUTES — MAXIMUM EXPOSURE TIME IS 20 MINUTES

Skin Type:		Level 1/Week 1 1st-3rd Sessions	Level 2	Level 3	Level 4	Subsequent Maximum
I Sensitive Skin	(Burns easily and severely and does not tan.)	NOT RECOMMENDED FOR TANNING				
II Light	(Burns easily and severely and tans minimally.)	4	8	12	16	20
III Normal	(Burns moderately and tans average.)	6	10	15	20	20
IV Dark	(Burns minimally, tans easily and above average.)	8	12	16	20	20

New lamps emit approximately 10% more ultraviolet radiation during the first 50 hours of operation. Recommended tanning times should therefore be reduced by approximately 10% during that period.

WARNING: • Read the instructions booklet before using this sunlamp product. • All persons in the room should wear protective eyewear when lamps are on. Recommended eyewear: provided eyeshields or equivalent eyewear as defined under 21 CFR 1040.20. Other types of eyewear may not provide adequate protection. Failure to use protective eyewear may result in severe burns or other eye injury. If discomfort develops, discontinue use and consult a physician.

THE FOLLOWING LAMPS HAVE BEEN CERTIFIED FOR USE IN THE 24RS MODEL SERIES:

GT Wolff® Model GT171-T12-100W BI-PIN and GT Wolff® Model GT159-T12-80W-BI-PIN
GOLDEN TAN™ Wolff® Model GT71-T12-100W BI-PIN and GOLDEN TAN™ Wolff® Model GT59-T12-80W BI-PIN
Heraeus E400 HPT, Philips Model HPA 400/30s or CosmoTech Model 23045 (face tanner unit)

DISCONNECT POWER CORD BEFORE ATTEMPTING TO CLEAN, RELAMP, OR ENGAGE IN THE MAINTENANCE OF THIS PRODUCT.

THIS EQUIPMENT MUST BE EARTH GROUNDED.
This product is in conformity with performance standards for sun lamp products under 21 CFR PART 1040.20 and ANSI/UL Standard 482.

INTERTEK ETL CM US LISTED 88465

Installation

Unpacking and Inspection

Your sunbed comes in two cardboard cartons, one for the bench and one for the canopy. Open the cartons and remove the bench and canopy as follows.

The bench and canopy are each wrapped in plastic. Pull back the plastic and, with a helper, grasp the bench and pull it from the carton bottom, leaving the plastic wrap and the carton packaging. Do the same for the canopy. Do not try to lift either unit with the plastic still on as it may slip.

Note! The cartons are reusable. You may wish to save them for future use.

The canopy box contains the canopy unit and a pair of gas springs. The bench box contains the following items:

- Bench Unit
- Box containing necessary assembly hardware, safety goggles, and pillow
- Box containing two stand legs

Inspect these items, including the canopy and bench, and make sure they are free from any visible damage. Report the extent of any damage to the transportation company.

Record the serial numbers of the canopy and bench in the area provided at the back of this manual. This information will be required whenever you call customer service.

Pre-Installation Planning

Before you begin to assemble your sunbed, you should observe the following pre-installation considerations.

⚠ WARNING

Shock hazard.

Disconnect power before servicing.

- Your sunbed operates from a 220V AC source. You should have a NEMA 6-20R electrical outlet (like the one shown below) installed in the room in which you will use the unit. The outlet should be on a dedicated circuit capable of providing 20 Amp service. We recommend installation by a professional electrician. The outlet must be earth grounded.

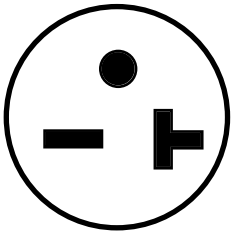

20 AMP NEMA #6-20R RECEPTACLE

⚠ CAUTION

Use of a voltage source above 230V AC may prevent proper operation of the sunbed and could cause damage and void the warranty.

⚠ CAUTION

Air from the room is used to cool the sunbed. Maximum ambient room temperature should be 80°F. Place your sunbed no closer than 6” from any wall. Make sure nothing obstructs the airflow into the sunbed’s endcaps or out of the fan openings. A poorly ventilated room may cause the unit to become hot and cause discomfort to the user.

⚠ CAUTION

Proper assembly of your sunbed requires three people. Plan to have a couple of helpers assist you.

Assembly Procedures

Hardware Inventory

Open the hardware box and remove the small bag of hardware. In addition to a pillow, make sure you have the following hardware items.

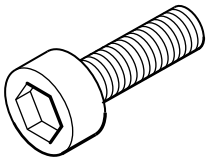

Allen-head Bolt
5/16″ x 1″
Quantity 2

5/16″ Metal Washer
Quantity 2

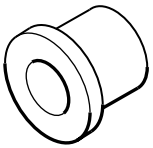

Bushing
Quantity 2

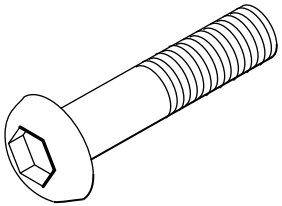

Allen-head Bolt
5/16″ x 1 1/2″
Quantity 2

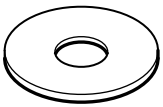

Nylon Washer
Quantity 2

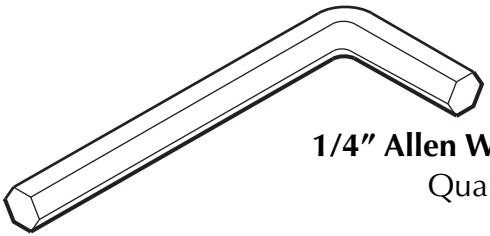

1/4″ Allen Wrench
Quantity 1

Safety Goggles
Quantity 1

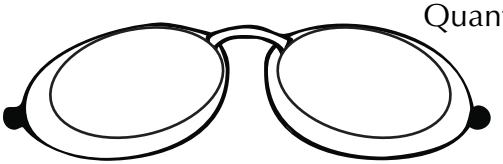

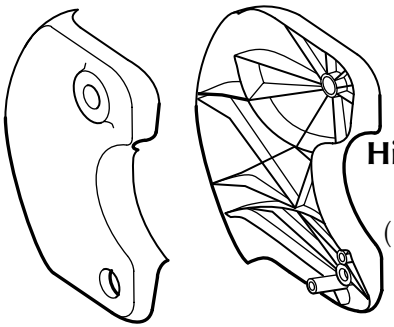

Hinge Brackets
Quantity 2
(left and right)

⚠ WARNING

Wear protective eyewear.
Failure to may result in severe burns or longterm injury to the eyes.

Attaching Legs to Bench

Lay the bench upside down on the floor. Locate the two stand legs and attach to the bench as shown below.

1. Using six 5/16″ x 1″ bolts and six larger 5/16″ washers (pre-installed, remove from bottom of sunbed), attach the stand legs with the skirt mounting holes toward the back of the bench as shown. Install center bolt first. You may have to gently push sides of legs in to align holes. Tighten with the Allen wrench.

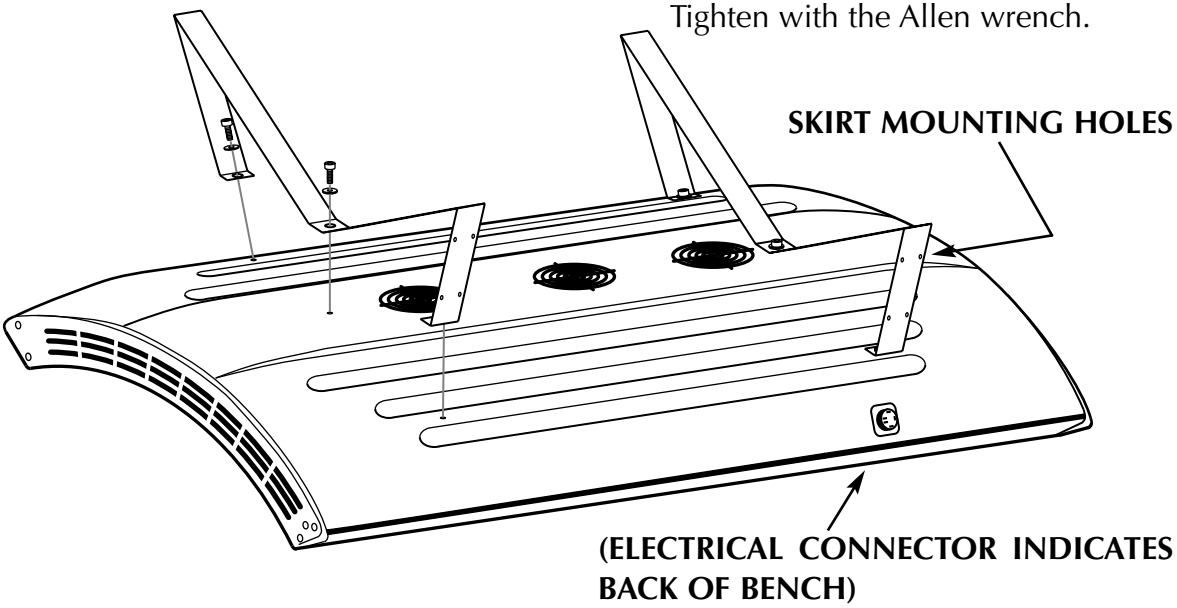

2. Turn bench right side up on floor. Place so that the power cord connector is facing toward the wall outlet.

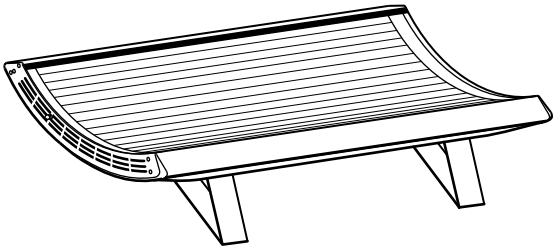

Attaching Hinge Brackets to Bench

Locate the two hinge brackets and identify the left and right brackets.

1. Install the hinge brackets to the ends of the bench such that the short boss engages the stud above the bolt hole, and the long boss engages the hole below the bolt hole. Secure using the 5/16″ x 1″ Allen-head bolts and 5/16″ metal washers. Tighten bolt snug, then an additional half turn.

2. Place the bushings into the hinge brackets as shown below.

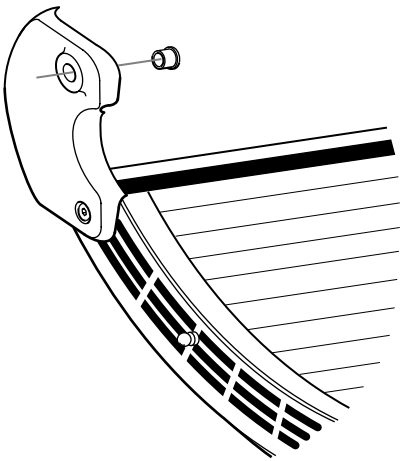

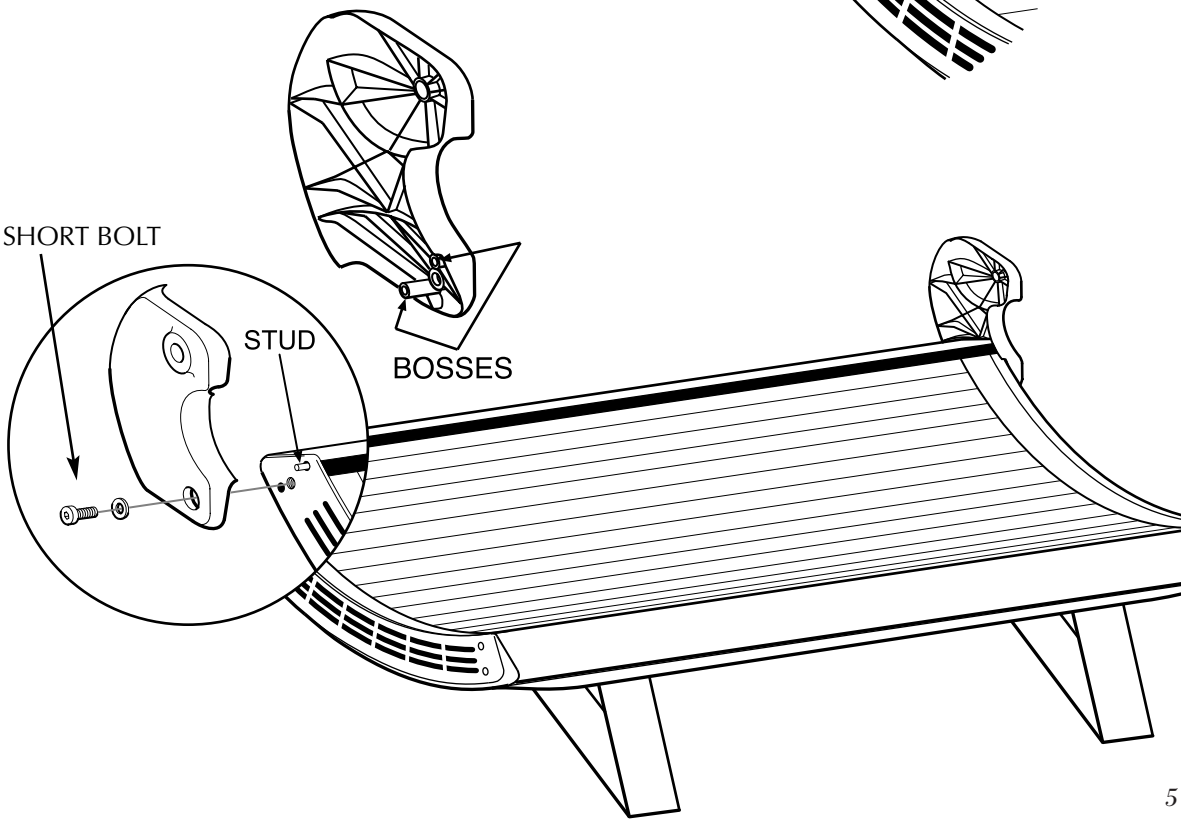

Attaching Canopy to Bench

1. Lift the canopy and hold it between the hinge brackets. You may want to use some of the cardboard packing, laid across the bench, to support the canopy.

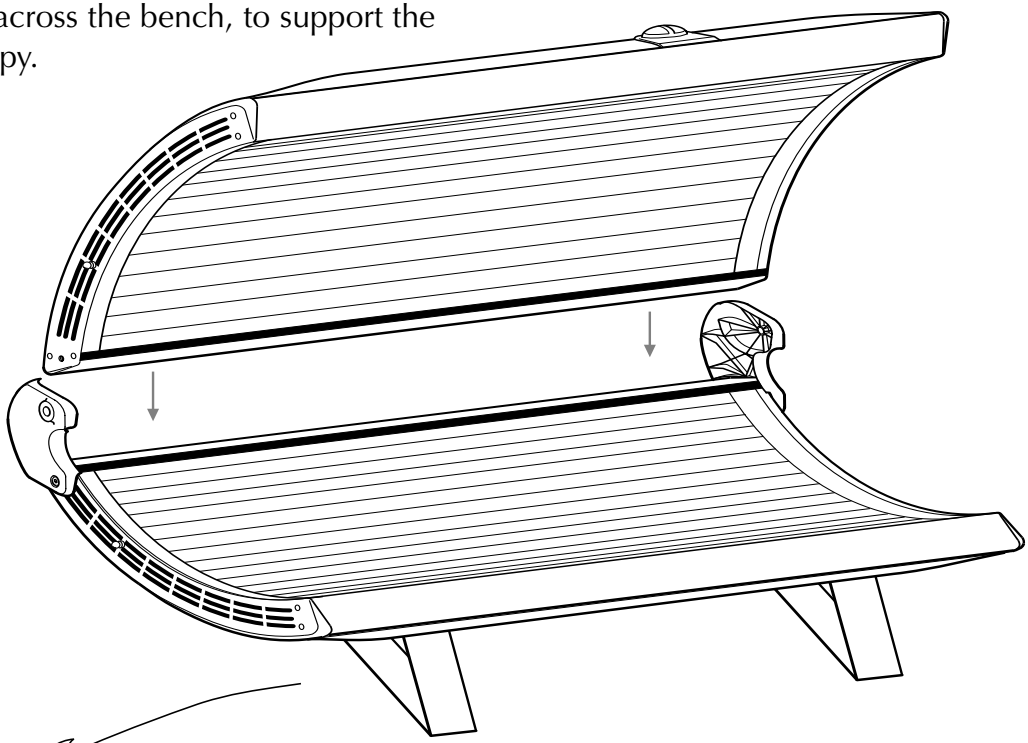

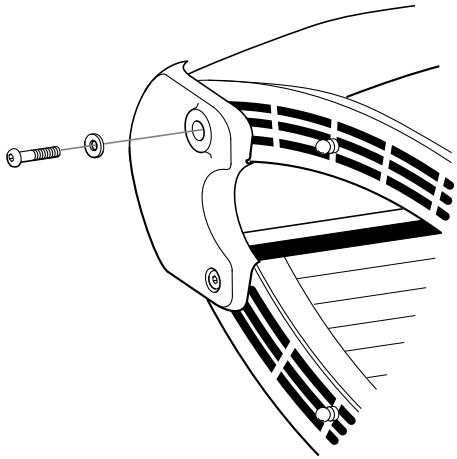

2. Insert the 5/16″ x 1 1/2″ bolts with the nylon washers into both hinge brackets. Tighten bolts into the end-cap threaded inserts until snug, then an additional half turn. Do not over-tighten to avoid damaging threaded inserts.

Attaching Gas Springs

1. The gas springs are shipped with locking clips installed. Use a screwdriver to pry back the locking clips on the gas springs as they are installed. (See right)

2. With a helper holding the canopy open, align open ends of gas spring ball joints with pivot studs and push into place. Be sure rod end is down as shown. DO NOT lower canopy until both gas springs are engaged!

3. Lift and lower canopy a few times to lubricate gas springs for optimum performance.

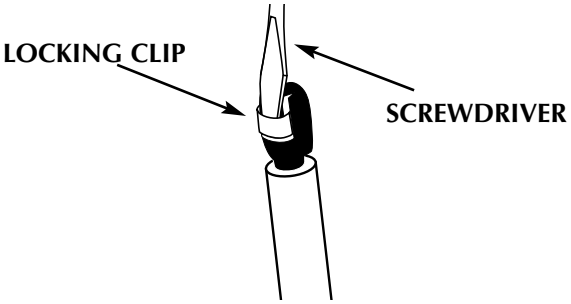

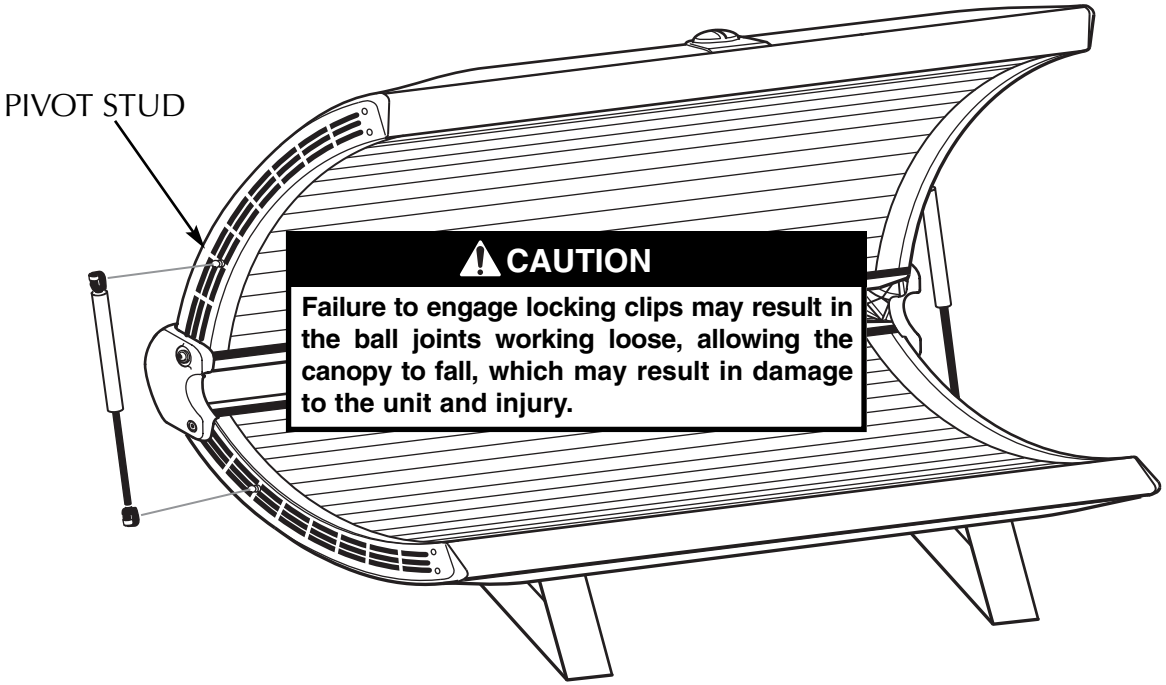

⚠ CAUTION

Failure to engage locking clips may result in the ball joints working loose, allowing the canopy to fall, which may result in damage to the unit and injury.

Making Electrical Connections

⚠ WARNING

Shock hazard.

Be sure AC power is disconnected before connecting cables.

1. Connect the canopy to bench power cord to the bench receptacle. The plug is polarized. Align the terminals and firmly push on until seated then tighten the threaded locking ring.

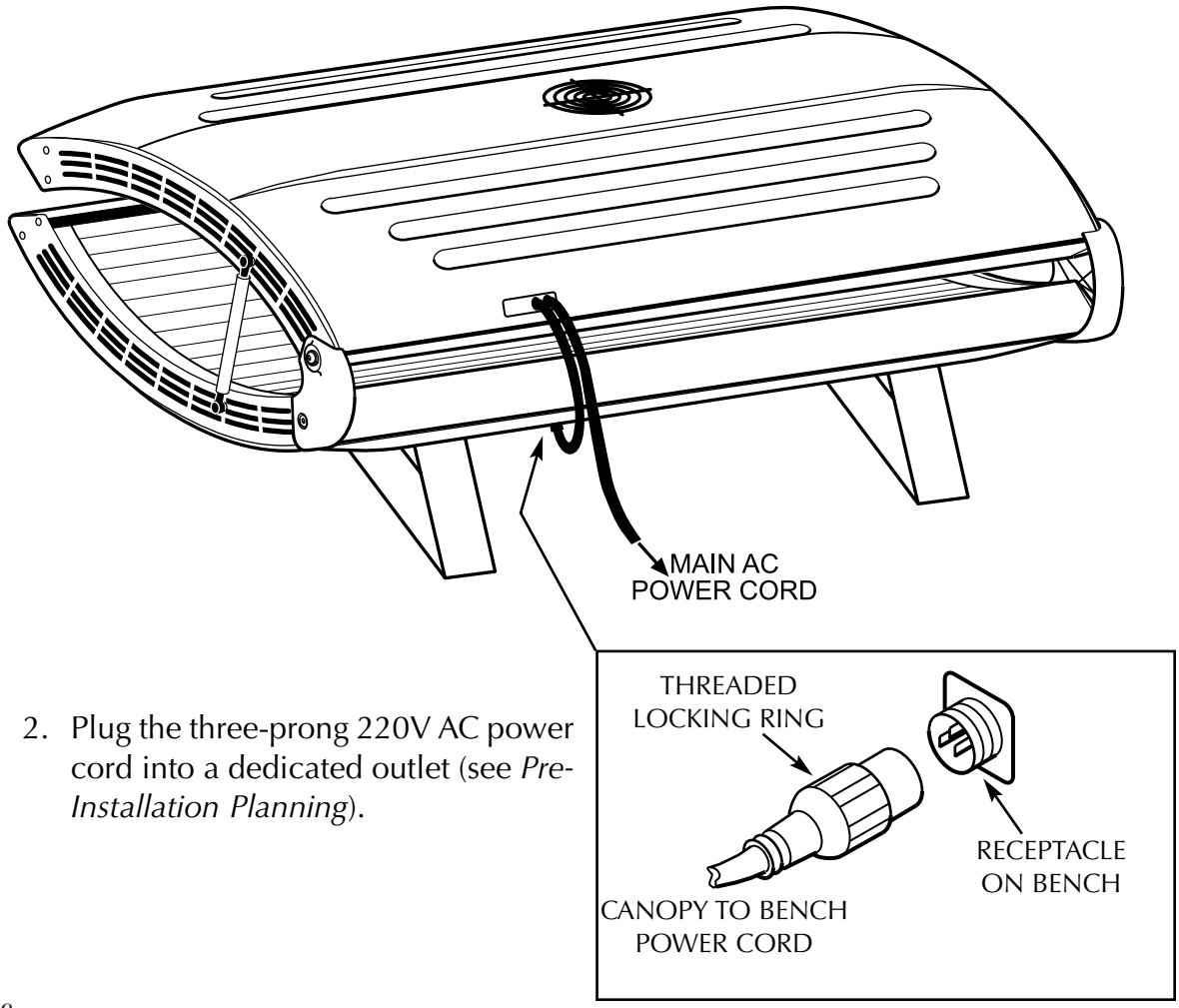

2. Plug the three-prong 220V AC power cord into a dedicated outlet (see *Pre-Installation Planning*).

Operation

Before You Tan

Before using your sunbed, please note the following important precautions.

- Your skin should be free of cosmetics, tanning oils, or other body lotions prior to tanning except for those specifically made for use with tanning devices. However, do not remove natural body oils by bathing or showering immediately before tanning.

- Your hair should be free of gels, mousses, sprays, or other hair products prior to tanning. These products can cause damage to the sunbed acrylic. As an alternative, a shower cap or towel can be worn to keep treated hair away from the sunbed surfaces.

- This unit intended for individual use. Only one pair of eyewear is included.

⚠ DANGER

Some medication may increase your sensitivity to ultraviolet light. It is recommended that you consult a physician before using this sunbed if taking any medication or if you suspect that your skin might be especially sensitive to sunlight.

⚠ DANGER

Shock hazard.

Do not operate this device near water or while you are wet.

Exposure Times

Follow the guidelines for skin type and exposure times as shown in the table below. Untanned persons should not tan on consecutive days during their first week of tanning. Never tan more than once a day. Tanning normally appears after the first few sessions and maximizes after approximately four weeks. Tan once or twice per week thereafter to maintain appearance. Persons already having a base tan may begin at advanced levels corresponding to the extent of their base tan.

RECOMMENDED EXPOSURE TIMES IN MINUTES — MAXIMUM EXPOSURE TIME IS 20 MINUTES

Skin Type:		Level 1/Week 1 1st-3rd Sessions	Level 2	Level 3	Level 4	Subsequent Maximum
I Sensitive Skin	(Burns easily and severely and does not tan.)	NOT RECOMMENDED FOR TANNING				
II Light	(Burns easily and severely and tans minimally.)	4	8	12	16	20
III Normal	(Burns moderately and tans average.)	6	10	15	20	20
IV Dark	(Burns minimally, tans easily and above average.)	8	12	16	20	20

25800-01A

Parental Lock

This sunbed is equipped with a parental lock switch. This switch helps you monitor usage of the sunbed by children and/or others. To activate, insert the key into the lock switch and turn, horizontal to lock and vertical to unlock (illustration shown unlocked). You may remove the key in the unlocked as well as locked position.

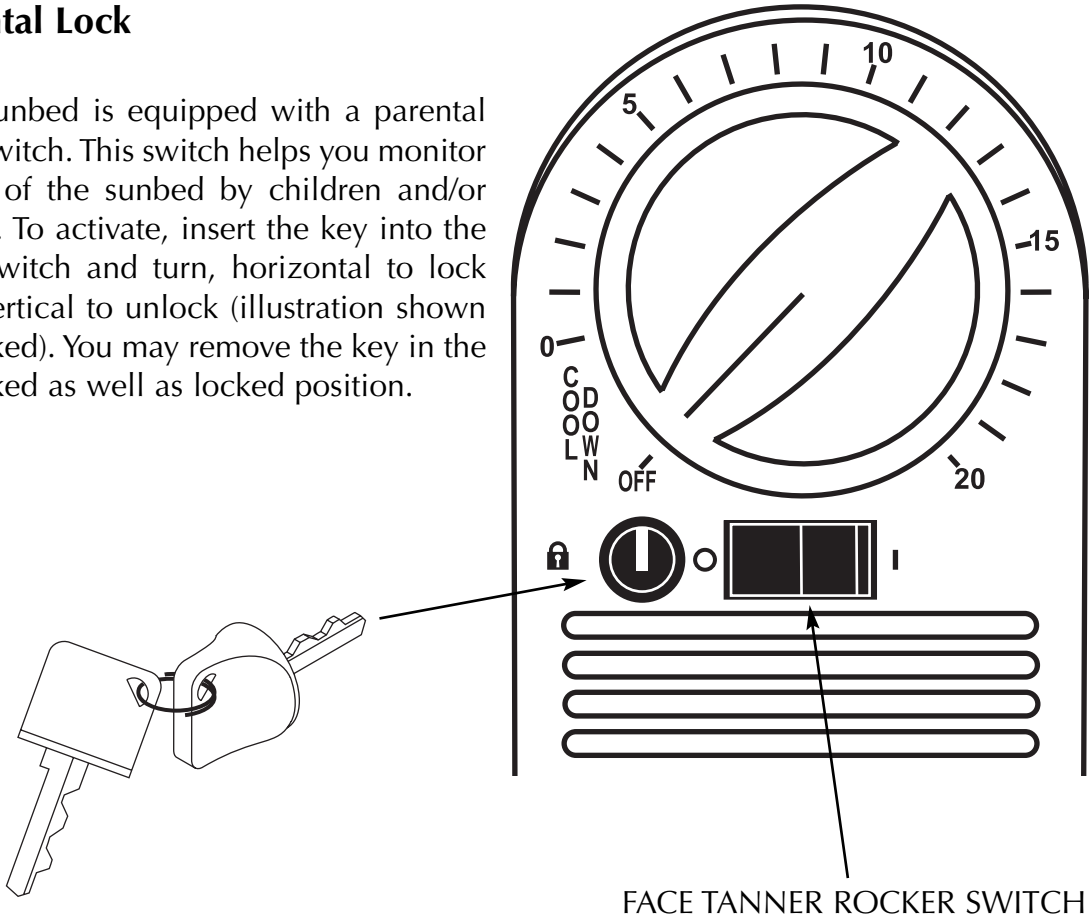

Using Your Sunbed

Once you have read *Before You Tan* and *Exposure Times*, you are ready to use your sunbed. Proceed as follows.

Your sunbed is designed for individual use. Always wear the safety goggles supplied with your sunbed or another approved pair of goggles, as defined under 21 CFR 1040.20. Regular sunglasses do not provide adequate protection from ultraviolet light.

⚠ WARNING

Wear protective eyewear.
Failure to may result in severe burns or longterm injury to the eyes.

Step 1 For units equipped with a face tanner, activate the face tanner by placing the rocker switch, located below the timer knob, into the "I" (ON) position. If you do not wish to use the face tanner, leave the switch in the "O" (OFF) position. **NOTE!** The face tanner lamps require a cooling period before they will light again.

Step 2 Put on your goggles. Set the timer to the desired number of minutes (after first determining the proper time period from the table in *Exposure Times*). The lamps will turn on as soon as you move the rotary dial past the "0" position.

Step 3 Lift the canopy, lie down on the bench (face up), and lower the canopy toward your body, maintaining minimum distances as described in *Safety Information*.

Step 4 When the timer reaches 0, the lamps will automatically turn off and the cooling fans will run for approximately 3 minutes during the "Cool Down" period.

Care and Maintenance

Cleaning After Use

Clean and disinfect your tanning bed's bench and canopy after each use. Use a non-abrasive disinfectant cleaner that **does not contain ammonia or ammonia derivatives**. Ammonia may damage the acrylic shields. Spray the acrylic lightly with disinfectant and wipe dry with a clean soft cloth. We recommend SunQuest® disinfectant and SunQuest® acrylic cleaner.

⚠ WARNING

Shock hazard.

Disconnect power before removing any protective covers.

Thorough Periodic Cleaning

Introduction

The cooling fans draw air through the bed and over time will cause a dust buildup on the lamps and reflectors. This will reduce the tanning effectiveness of the bed. When a dust buildup is observed, it is necessary to thoroughly clean the inside of the bench and canopy.

Cleaning the Canopy and Bench

1. Remove the acrylic shields and lamps as described in *Replacing Lamps*.
2. With a soft cloth, wipe the entire length of each lamp to remove any film buildup.
3. Clean both sides of the acrylic shields with a non-ammonia disinfectant cleaner.
4. Wipe the reflectors with a clean damp cloth.
5. Re-install the lamps and acrylic shields.

Mechanical Inspection

Your tanning bed has been built for years of service. To ensure trouble-free operation throughout its life, inspect the unit's mechanical integrity every 400-500 hours of use.

- Inspect the unit's fasteners verifying that all are firmly in place. Pay particular attention to the hinge bolts.
- Inspect gas springs for signs of wear. Gas springs that will not hold the canopy in the full open position when raised should be immediately replaced.
- Inspect the timer as indicated in this manual under *Timer Maintenance*.
- Inspect the AC power cord and its connections.
- Inspect the acrylic. Broken, cracked or badly scratched acrylics should be immediately replaced.

Replacing Lamps

Introduction

To be assured of maximum tanning effectiveness, change lamps after approximately 800-1000 hours of use. Tanning will continue after this time but at a slower rate. To ensure trouble-free operation of your sunbed, replace the lamp starters whenever the lamps are replaced.

⚠ WARNING

Shock hazard.
Disconnect power before servicing.

Removing/Replacing Acrylic Shield

The acrylic shields in the bench and canopy are secured in place by hinged profiles which run the length of the bed, both front and back. Simply pry up on the inside edge of the profile until it releases its latching action (see figure at right). Continue to pry up the profile across its entire length until it swings back freely. Repeat for the other profile. The long edges of the acrylic shield are now exposed.

Standing in front of the sunbed, grasp the exposed edge of the acrylic and carefully slide it toward you until it is removed.

After changing the lamps, replace the acrylic shields by reversing the above directions. Close the hinged profile by pushing it back into place until it snaps tight.

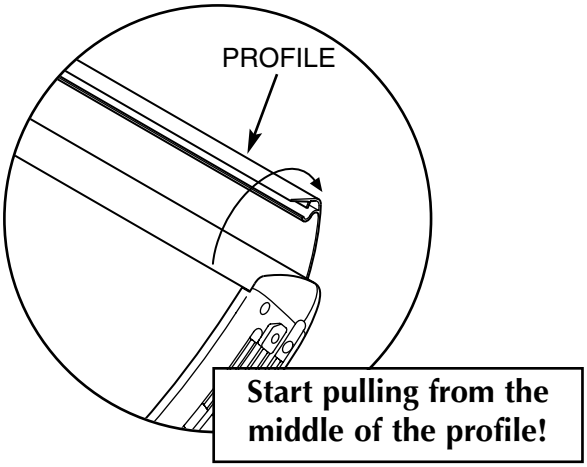

⚠ CAUTION

Be careful. The edges of the acrylic shield may be sharp.

Removing/Replacing Lamps

After removing the acrylic shields, replace lamps as follows.

Step 1 Grasp a lamp at one end and at the middle, then turn the lamp a quarter turn. The lamp may then be gently removed from its holder.

Step 2 To reinstall a lamp, insert the pins located on the ends of the lamp into the slots on top of the lamp holder and turn the lamp a quarter turn.

Recommended Replacement Lamps

We recommend using the lamps specified below. Use of uncertified lamps is a violation of Federal regulations and will void your warranty. These lamps have an average life of 800-1000 hours of effective tanning use. Lamps used longer than that begin to lose their effectiveness even though they will continue to light.

⚠ WARNING

Shock hazard.
Disconnect power before servicing.

THE FOLLOWING LAMPS HAVE BEEN CERTIFIED FOR USE IN THE 24RS:

GT Wolff® Model GT171-T12-100W BI-PIN
GOLDEN TAN™ Wolff® Model GT71-T12-100W BI-PIN

THE FOLLOWING LAMPS HAVE BEEN CERTIFIED FOR USE IN THE 24RSF:

GT Wolff® Model GT159-T12-80W-BI-PIN (Short Lamps)
GT Wolff® Model GT171-T12-100W BI-PIN (Full-length lamps)
GOLDEN TAN™ Wolff® Model GT59-T12-80W BI-PIN (Short Lamps)
GOLDEN TAN™ Wolff® Model GT71-T12-100W BI-PIN (Full-length lamps)
Heraeus E400 HPT, Philips Model HPA 400/30s or CosmoTech Model 23045 (SolarMax™ IFT Face tanner unit)

Removing/Replacing SolarMax™ IFT Face Tanner Lamp on F Models

After removing the canopy acrylic shield, replace the face tanner lamp as follows:

Step 1 Support the face tanner assembly with your hand while unscrewing the two retaining screws. The face tanner glass casing will swing downward.

Step 2 The lamp can now be exchanged. The lamp holders are equipped with spring contacts which enable the lamp to be removed easily. Remove the old lamp and discard. Install the new lamp, using a clean cloth or paper towel. Ensure that the lamp is firmly seated in the lamp holders.

Note! Never take hold of the lamp such that your fingers are in contact with the lamp glass. Finger oils will greatly reduce the lamp's operational life.

Step 3 Gently close the face tanner glass casing and lock it closed with the screws. Ensure that the screws firmly secure the glass casing.

⚠ DANGER

Unfiltered light from face tanner can cause severe burns.
Never turn sunbed on while face tanner is disassembled or when glass filters are removed.
Immediately discontinue use of this equipment if face tanner glass is broken or any unfiltered light can be seen escaping face tanner assembly.

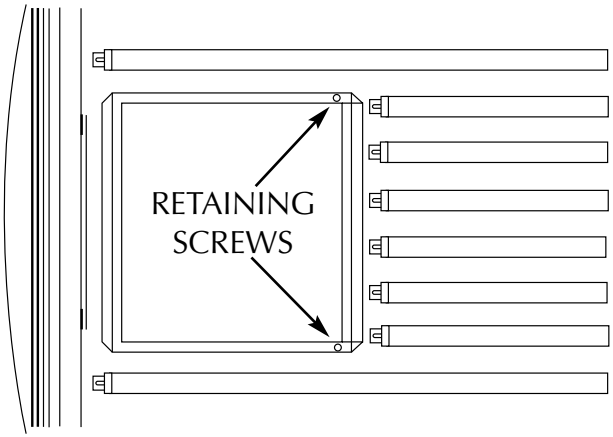

Timer Maintenance

Your *SunQuest*® sunbed is equipped with a backup shut-off timer which will automatically turn off the sunbed in the unlikely event of a malfunction of the primary timer. This important safety feature also prevents the user from re-setting the timer before the end of the pre-set maximum time interval. The electronic timer limiting circuit is automatically reset each time the primary timer is turned to the OFF position.

Annually, or whenever your sunbed is re-lamped, check the operation and accuracy of the timer system as follows. DO NOT perform these tests with a person in the sunbed.

Step 1 Obtain an accurate watch capable of measuring in seconds. Set the timer to its maximum interval. Using the watch, time how long the lamps remain on. The lamps should shut off within plus or minus 10% of the maximum timer interval.

Step 2 Set the timer to the maximum time interval. Wait ten minutes, then turn the knob back to the maximum time position. The electronic time limiting circuit should turn the lamps off at an elapsed time equal to approximately 10% beyond the maximum timer interval, even though the primary timer continues to show time left.

Call ETS Customer Service if your timer does not operate properly, or if you experience difficulty with these tests.

Troubleshooting

Problem	Solution
Lamps fail to light	1. Check source of AC power. Reset circuit breaker or replace fuse if necessary. 2. Make sure the unit is plugged into outlet. 3. Make sure cord between canopy and bench is properly connected. 4. Make sure timer dial is turned to a number past 0. 5. Make sure Parental Lock is in the vertical position.
One or more lamps fail to light	1. Check that lamp is installed correctly. 2. Switch unlit lamp with a lamp that lights. If the new lamp lights and the old lamp still does not, replace old lamp. 3. If replacing lamp does not remedy problem, contact your service representative.
Canopy fails to stay in the up or down position	Gas springs should hold the canopy fully open as well as allow it to rest fully closed. If the canopy is left open for an extended period of time it may creep down. This is considered normal. Keep the canopy closed when not in use. Replace gas springs when they no longer have sufficient power to hold the canopy open when raised.
Sunbed does not stay lit	1. Check source of AC power. Reset circuit breaker or replace fuse if necessary. 2. Check timer system per maintenance instructions in this guide. Contact your service representative.

N-24RS

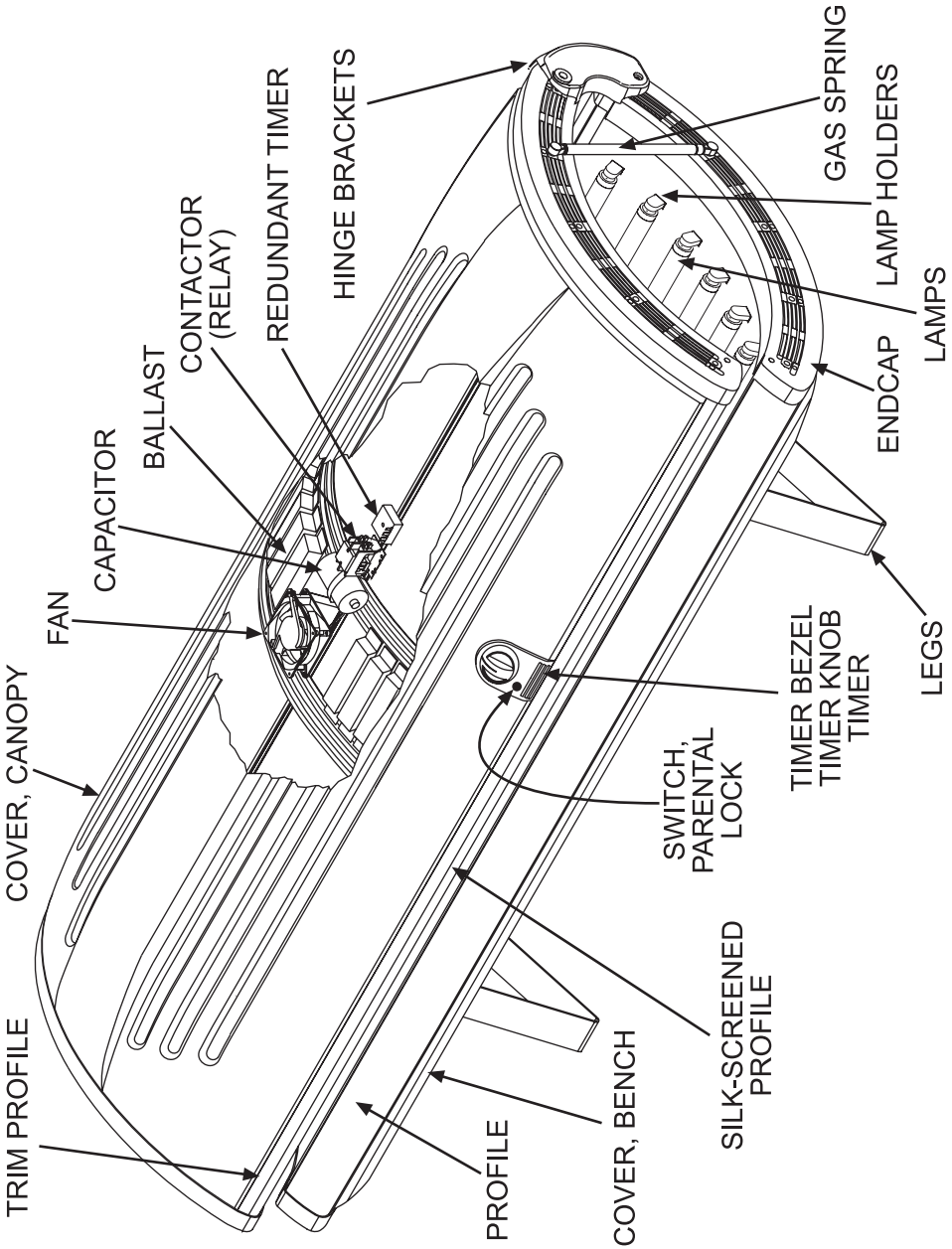
TRIM PROFILE
COVER, CANOPY
FAN
CAPACITOR
BALLAST
CONTACTOR (RELAY)
REDUNDANT TIMER
HINGE BRACKETS
PROFILE
COVER, BENCH
SILK-SCREENED PROFILE
SWITCH, PARENTAL LOCK
TIMER BEZEL
TIMER KNOB
TIMER
LEGS
ENDCAP
LAMPS
LAMP HOLDERS
GAS SPRING

N-24RSF

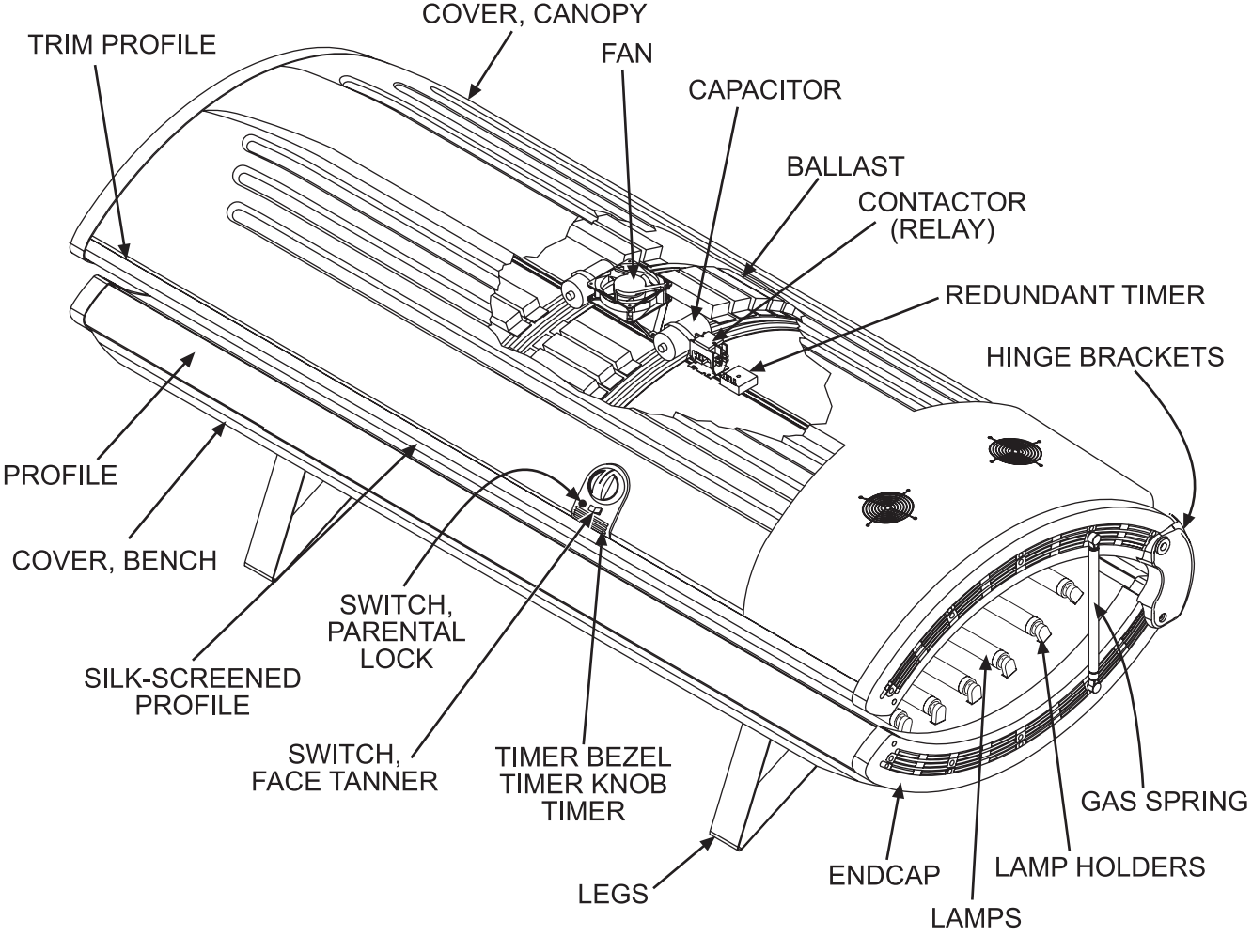

CALL FOR SERVICE OR QUESTIONS: 1•800•449•3605
ETS, Inc. 6270 Corporate Drive, Indianapolis, IN 46278-2900

Parts List

This is a list of parts which may be replaced by the consumer. Care should be taken when replacing anything related to electrical wiring. We recommend contacting a professional electrician. When calling for parts, first state your bed model as N-24RS or N-24RSF. Then refer to this list and preceding illustrations for proper part identification.

Acrylic, Bench*
Acrylic, Canopy*
Ballast, 80W* (for short lamps on 24SF)
Ballast, 100W (1 for each main lamp, 4 for each face tanner lamp)
Capacitor, 75uF
Contactor (Relay)
Cover, Bench
Cover, Canopy
Endcap Kit (1 left and 1 right endcap)
Fan
Gas Spring set
Hardware Kit* (assembly hardware)
Hinge Brackets (left and right)
Keys, Parental Lock*
Lamp Holder w/ Starter*
Lamp Holder w/o Starter
Lamp Holder, Face Tanner*
Lamps
Leg Mounts* (found inside the bench)
Legs
Manual*
Pillow*
Profile (blank)
Redundant Timer
Schematic Packet*
Silk-screened Profile
Starter, K-11* (main lamps)
Starter, Face Tanner* (ignitor)
Switch, Face Tanner
Switch, Parental Lock
Thermostat, Face Tanner*
Timer
Timer Bezel
Timer Knob
Trim Profile (blue)

Record this information for ease of service:

Date of purchase: _____

Bench serial number: _____

Canopy serial number: _____

* Not shown

Limited Lifetime Warranty

SunQuest® warrants your tanning unit to be free of structural defects in its material and workmanship, under normal use, for its lifetime. **SunQuest** will repair or replace, at their discretion, any defect to the structure which affects the performance of the unit.

For 6 months from the date of purchase, **SunQuest** will provide replacements for parts that prove to be defective in material or workmanship. Acrylic shields, fluorescent lamps, and lamp starters are excluded from this warranty. Labor will be covered for 30 days from purchase date. Normal wear, damage from misuse or abuse, damage incurred in transit, or damage done by unauthorized repairs or modifications are not covered by this warranty.

ETS, Inc. disclaims any implied warranty of merchantability or fitness for any period beyond the expressed warranty. Some states do not allow limitations on how long an implied warranty lasts, so the above limitations may not apply to you.

No one has authority to change or modify this Limited Lifetime Warranty in any respect. To obtain service under the Limited Lifetime Warranty, contact **ETS, Inc.** at **1-800-449-3605**, and ask for the Technical Service Department.

ETS, Inc. shall not be liable for loss of use, loss of time , inconvenience, rental or substitute products, loss of business, loss of income, or any other incidental or consequential damages. Some states do not allow the exclusion or limitation of incidental or consequential damages, so the above limitation or exclusion may not apply to you.

This warranty gives you specific legal rights, and you may also have other rights which may vary from state to state.

All warranty service must be performed by an authorized service person. If your tanning unit must be returned for service, all freight charges must be at your expense. Contact your place of purchase for the address of the **SunQuest** Service Center nearest you. Proof of purchase is required to obtain warranty service.

This warranty covers the original purchaser only. This warranty is void if the unit is modified in any manner from its original design.

25800-01A

	24RS	24RSF
Size	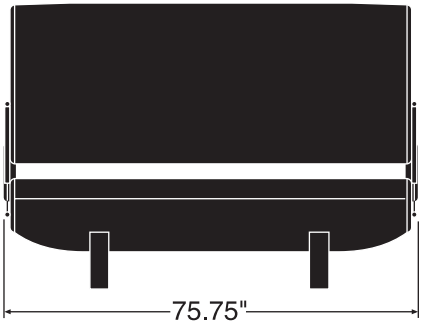	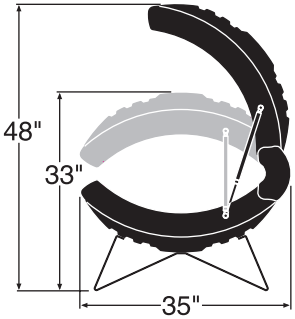
Weight (pounds)	258	288
Minimum Room Size	6′ x 8′	6′ x 8′
Electrical -		
Voltage (AC)	220	220
Amperage	12	16
Circuit Breaker (Amps)	20	20
Outlet (NEMA standard)	6-20R	6-20R
Main Lamps	GT 100W	GT 100W/80W
Ballasts	100W	100W/80W
Face Tanner	NA	SolarMax™ IFT
FT Ballasts	NA	4 x 100W
Timer System	Electro-mechanical	Electro-mechanical
Max. Exposure Time	20minutes	20minutes
Back-up Timer	Solid-state	Solid-state

CALL FOR SERVICE OR QUESTIONS:
1•800•449•3605
6270 Corporate Drive Indianapolis, IN 46278-2900