SunQuest®

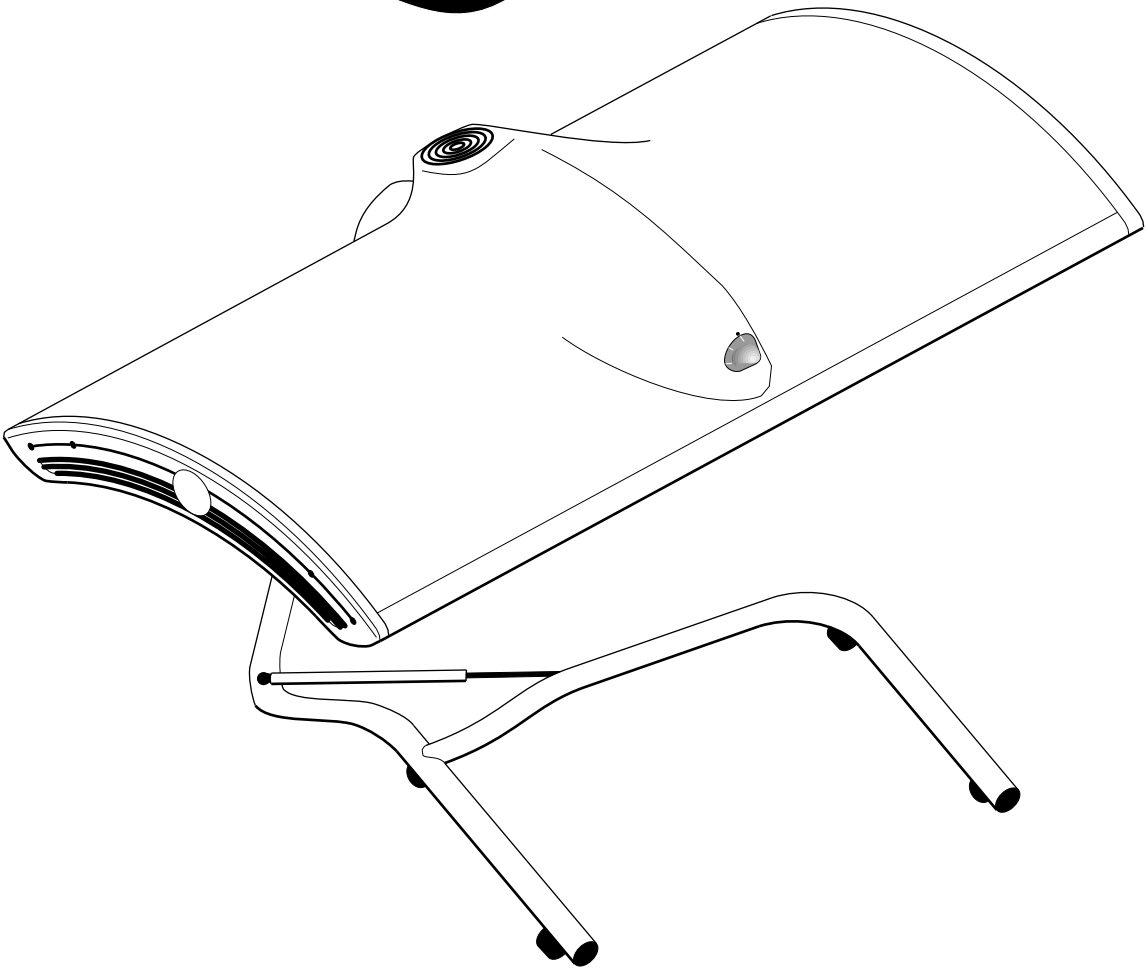

Models 2000 & 3000

USER MANUAL

24372-01A

Limited Lifetime Warranty

SunQuest® warrants your tanning unit to be free of structural defects in its material and workmanship, under normal use, for its lifetime. **SunQuest** will repair or replace, at their discretion, any defect to the structure which affects the performance of the unit.

For 6 months from the date of purchase, **SunQuest** will provide replacements for parts that prove to be defective in material or workmanship. Acrylic shields, fluorescent lamps, and lamp starters are excluded from this warranty. Labor will be covered for 30 days from purchase date. Normal wear, damage from misuse or abuse, damage incurred in transit, or damage done by unauthorized repairs or modifications are not covered by this warranty.

ETS, Inc. disclaims any implied warranty of merchantability or fitness for any period beyond the expressed warranty. Some states do not allow limitations on how long an implied warranty lasts, so the above limitations may not apply to you.

No one has authority to change or modify this Limited Lifetime Warranty in any respect. To obtain service under the Limited Lifetime Warranty, contact **ETS, Inc.** at **1-800-449-3605**, and ask for the Technical Service Department.

ETS, Inc. shall not be liable for loss of use, loss of time , inconvenience, rental or substitute products, loss of business, loss of income, or any other incidental or consequential damages. Some states do not allow the exclusion or limitation of incidental or consequential damages, so the above limitation or exclusion may not apply to you.

This warranty gives you specific legal rights, and you may also have other rights which may vary from state to state.

All warranty service must be performed by an authorized service person. If your tanning unit must be returned for service, all freight charges must be at your expense. Contact your place of purchase for the address of the **SunQuest** Service Center nearest you. Proof of purchase is required to obtain warranty service.

This warranty covers the original purchaser only. This warranty is void if the unit is modified in any manner from its original design.

24372-01A

Welcome

Congratulations on your purchase of this technologically advanced sun tanning unit. It has been designed to provide years of dependable service for you.

Please read all the instructions in this booklet before installing and using the unit. Always be sure to observe all safety precautions.

Contents

Safety Information . . . . . ***iii***

Installation **1**
- Unpacking and Inspection 1
- Pre-Installation Planning 2
- Transporting 3

Operation **4**
- Before You Tan 4
- Exposure Times 4
- Using Your Sunbed 5

Care and Maintenance **6**
- Thorough Periodic Cleaning 6
- Mechanical Inspection 6
- Replacing Lamps 7
- Timer Maintenance 8

Troubleshooting **10**

Safety Information

LABELING NOTICE: Labels are affixed on all systems to inform the user of possible dangers. Regulations are stated in 21 CFR, Section 1040.20, and require that all products manufactured after September 8, 1986 which use sunlamps must display the following:

DANGER Ultraviolet radiation. Follow instructions. Avoid overexposure. As with natural sunlight, overexposure can cause eye and skin injury and allergic reactions. Repeated exposure may cause premature aging of the skin and skin cancer. WEAR PROTECTIVE EYEWEAR; FAILURE TO MAY RESULT IN SEVERE BURNS OR LONG-TERM INJURY TO THE EYES. If discomfort develops, discontinue use and consult a physician. Medications or cosmetics may increase your sensitivity to the ultraviolet radiation. Consult physician before using sunlamp if you are using medications or have a history of skin problems or believe yourself especially sensitive to sunlight. If you do not tan in the sun, you are unlikely to tan from the use of this product. Children, the elderly, or fair skinned people who always burn easily and either never tan or tan minimally should not use this equipment.

To use, lie down under canopy and pull down as far as adjustment will allow. Do not use without wire grid in place. Untanned persons should not tan on consecutive days during their first week of tanning. Never tan more than once a day. Tanning normally appears after the first few sessions and maximizes after approximately four weeks. Tan once or twice per week thereafter to maintain appearance. Persons already having a base tan may begin at advanced levels corresponding to the extent of their base tan.

RECOMMENDED EXPOSURE TIMES IN MINUTES — MAXIMUM EXPOSURE TIME IS 20 MINUTES

Skin Type:		Level 1/Week 1 1st-3rd Sessions	Level 2	Level 3	Level 4	Subsequent Maximum
I Sensitive Skin	(Burns easily and severely and does not tan.)	NOT RECOMMENDED FOR TANNING				
II Light	(Burns easily and severely and tans minimally.)	4	8	12	16	20
III Normal	(Burns moderately and tans average.)	6	10	15	20	20
IV Dark	(Burns minimally, tans easily and above average.)	8	12	16	20	20

New lamps emit approximately 10% more ultraviolet radiation during the first 50 hours of operation. Recommended tanning times should therefore be reduced by approximately 10% during that period.

WARNING: • Read the instructions booklet before using this sunlamp product. • All persons in the room should wear protective eyewear when lamps are on. Recommended eyewear: provided eyeshields (Lucas Products Super Sunnies or Intrexco No. 5635/1) or equivalent eyewear as defined under 21 CFR 1040.20. Other types of eyewear may not provide adequate protection.

ONLY THE FOLLOWING LAMPS HAVE BEEN CERTIFIED FOR USE IN THE 2000S AND 3000S:
GOLDEN TAN™ Wolff® Model GT71-T12-100W BI-PIN

DISCONNECT POWER CORD BEFORE ATTEMPTING TO CLEAN, RELAMP, OR ENGAGE IN THE MAINTENANCE OF THIS PRODUCT.

THIS EQUIPMENT MUST BE EARTH GROUNDED.

This product is in conformity with performance standards for sun lamp products under 21 CFR PART 1040.20 and ANSI/UL Standard 482.

ETL LISTED US
88465

24372-01A

Installation

Unpacking and Inspection

Your suntanning canopy comes in a single cardboard carton, fully assembled. Remove the canopy as follows.

The canopy is wrapped in plastic. Pull back the plastic and, with a helper, grasp the canopy and pull it from the carton bottom, leaving the plastic wrap and the carton packaging. Do not try to lift the unit with the plastic still on as it may slip.

Note! The carton is reusable, in the unlikely event that you may find it necessary to return your canopy.

You should find the following items when unpacking the box:

- Canopy Unit
- Safety Goggles
- This User Manual

Inspect the unit and make sure it is free from any visible damage. Report the extent of any damage to the transportation company.

Read the transporting instructions in this manual before attempting to move or lift your sun canopy.

Record the serial number of the canopy in the area provided at the back of this manual. This information will be required whenever you call for customer service.

Pre-Installation Planning

Before you begin to use your sun canopy, you should observe the following pre-installation considerations.

- The ***SunQuest®*** tanning canopy operates from a **120V AC** source. For a **2000S** you should have a **NEMA 5-15R** electrical outlet (like the one shown below) installed in the room in which you will use the unit. The outlet should be on a dedicated circuit capable of providing **15 Amp** service. For a **3000S** you should have a **NEMA 5-20R** electrical outlet (like the one shown below, right) installed in the room in which you will use the unit. The outlet should be on a dedicated circuit capable of providing **20 Amp** service. We recommend installation by a professional electrician. The outlet must be earth grounded.

⚠ WARNING

Shock hazard.

Disconnect power before servicing.

⚠ CAUTION

Air from the room is used to cool the unit. Maximum ambient room temperature should be 80°F. Place your sun canopy no closer than 6” from any wall. Make sure nothing obstructs the airflow into the unit’s endcaps or out of the fan openings. A poorly ventilated room may cause the unit to become hot and cause discomfort to the user.

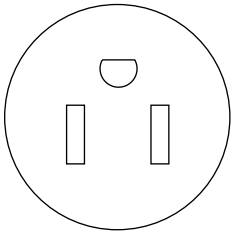

15 AMP NEMA#5-15R RECEPTACLE

ACCEPTABLE FOR 2000S

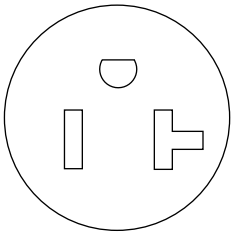

20 AMP NEMA#5-20R RECEPTACLE

ACCEPTABLE FOR 2000S AND 3000S

Transporting

Your sun canopy comes with a handling strap attached on the swivel arm, this strap should be used when transporting the sun canopy.

- Lower the sun canopy to its fully closed position by pressing down on the swivel arm on the back of the unit.

Note! Do not press down on the canopy itself, as this action causes added stress to the canopy structure.

- Buckle the handling strap around the swivel arm and base tube as shown below.

- One person can now roll the sun canopy by lifting one end.

Note! When maneuvering the canopy to go through a doorway tilt the canopy so that the swivel arm is down.

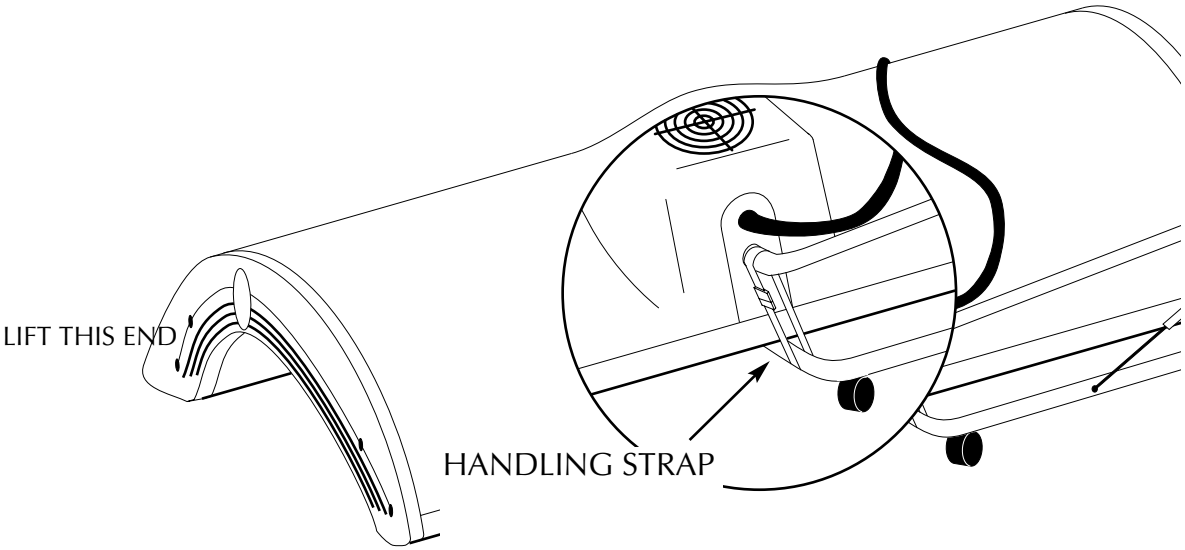

24372-01A

Operation

Before You Tan

Before using your sun canopy, please note the following important precautions.

- Your skin should be free of cosmetics, tanning oils, or other body lotions prior to tanning except for those specifically made for use with tanning devices. However, do not remove natural body oils by bathing or showering immediately before tanning.

⚠ DANGER

Shock hazard.
Do not operate this device near water or while you are wet.

⚠ DANGER

Some medication may increase your sensitivity to ultraviolet light. It is recommended that you consult a physician before using this sunlamp device if taking any medication or if you suspect that your skin might be especially sensitive to sunlight. Included with this manual is an FDA booklet on medications that increase sensitivity to light.

Exposure Times

Follow the guidelines for skin type and exposure times as shown in the table below. Untanned persons should not tan on consecutive days during their first week of tanning. Never tan more than once a day. Tanning normally appears after the first few sessions and maximizes after approximately four weeks. Tan once or twice per week thereafter to maintain appearance. Persons already having a base tan may begin at advanced levels corresponding to the extent of their base tan.

RECOMMENDED EXPOSURE TIMES IN MINUTES — MAXIMUM EXPOSURE TIME IS 20 MINUTES

Skin Type:		Level 1/Week 1 1st-3rd Sessions	Level 2	Level 3	Level 4	Subsequent Maximum
I Sensitive Skin	(Burns easily and severely and does not tan.)	NOT RECOMMENDED FOR TANNING				
II Light	(Burns easily and severely and tans minimally.)	4	8	12	16	20
III Normal	(Burns moderately and tans average.)	6	10	15	20	20
IV Dark	(Burns minimally, tans easily and above average.)	8	12	16	20	20

24372-01A

Using Your Sun Canopy

Once you have read *Before You Tan* and *Exposure Times*, you are ready to use your sun canopy. Proceed as follows.

Your sunbed is designed for individual use. Always wear the safety goggles supplied with your sunbed or another approved pair of goggles, as defined under 21 CFR 1040.20. Regular sunglasses do not provide adequate protection from ultraviolet light.

⚠ WARNING

Wear protective eyewear.
Failure to may result in severe burns or longterm injury to the eyes.

Step 1 Release the buckle on the handling strap and raise the canopy by lifting the swivel arm. Extend the canopy to its fully open position.

Step 2 Put on your goggles. Set the timer (on top of the canopy) to the desired number of minutes (after first determining the proper time period from the table on the previous page). The lamps will turn on as soon as you move the rotary dial from the "0" position.

Step 3 Lie on a bed or cot and position the canopy over your body. Grasp the canopy at its edges, near its center pivoting point, and pull toward your body. For best results position the canopy within a couple inches from your body.

Step 4 When the timer reaches 0, the lamps will automatically turn off.

Care and Maintenance

Thorough Periodic Cleaning

Introduction

The cooling fans draw air through the unit and over time will cause a dust buildup on the lamps and reflector. This will reduce the tanning effectiveness of the bed. When a dust buildup is observed, it is necessary to thoroughly clean the inside of the canopy.

⚠ WARNING

Shock hazard.
Disconnect power before servicing.

Note! The canopy can be rotated to a vertical position to aid in cleaning and relamping. Do not attempt to rotate past this point as damage may occur.

Cleaning the Canopy

Step 1 Remove the metal grid and lamps as described in *Replacing Lamps*.

Step 2 With a soft cloth, wipe the entire length of each lamp to remove any film buildup.

Step 3 Clean the grid with a non-ammonia disinfectant cleaner.

Step 4 Wipe the reflector with a clean damp cloth.

Step 5 Re-install the lamps and metal grid.

Mechanical Inspection

Your sun canopy has been built for years of service. To ensure trouble-free operation throughout its life, inspect the unit's mechanical integrity every 400-500 hours of use.

- Inspect the unit's fasteners verifying that all are firmly in place.
- Inspect the gas spring for signs of wear. Gas springs that will not hold the canopy in the full open position when raised should be immediately replaced.
- Inspect the timer as indicated in this manual under *Timer Maintenance*.
- Inspect the AC power cord and its connections.

Replacing Lamps

⚠ WARNING

Shock hazard.
Disconnect power before removing any protective covers.

Removing/Replacing Lamps

Step 1 To remove the metal grid you must remove either endcap. The endcaps are held in place by four, Phillips-head screws. Slide the grid out of the canopy as shown below.

Step 2 Grasp a lamp at one end and at the middle, then turn the lamp a quarter turn. The lamp may then be gently removed from its holder.

Step 3 To reinstall a lamp, insert the pins located on the ends of the lamp into the slots on top of the lamp holder and turn the lamp a quarter turn.

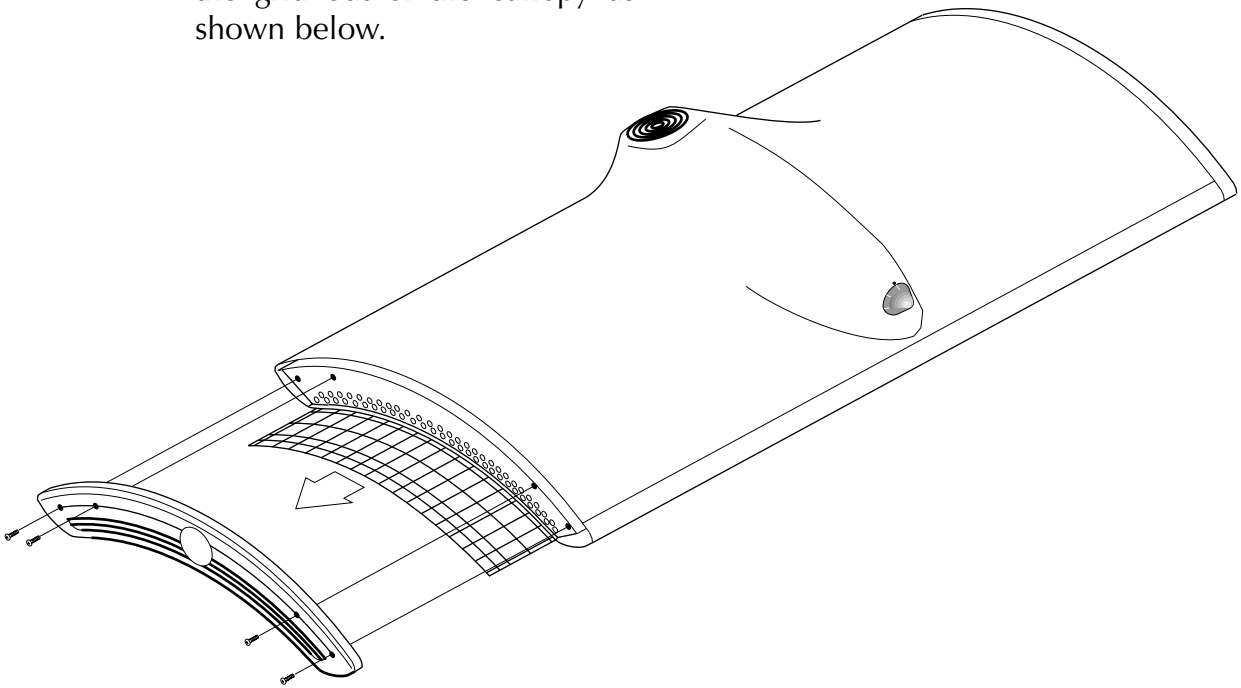

Recommended Replacement Lamps

We recommend using the lamps specified below. Use of uncertified lamps is a violation of Federal regulations and will void your warranty. These lamps have an average life of 800-1000 hours of effective tanning use. Lamps used longer than that begin to lose their effectiveness even though they will continue to light.

ONLY THE FOLLOWING LAMP HAS BEEN CERTIFIED FOR USE IN THE 1000:

GOLDEN TAN™ Wolff® Model GT71-T12-100W BI-PIN

Swivel Adjustment

Over time you may notice your sun canopy does not hold its position when tanning. Where the swivel arm enters the canopy, under the canopy cover, is a bracket that controls the rotation friction of the unit.

Step 1 Remove the endcaps from the canopy. They are held in place by four screws each.

Step 2 Remove the two screws at the back of the unit that hold the canopy cover to the power bracket. You may then pry the cover up enough to gain access to the bracket (shown below).

Step 3 To adjust the rotation friction simply turn the nuts on the bracket (clockwise to tighten and counter-clockwise to loosen).

Reverse the above instructions to put your canopy back together

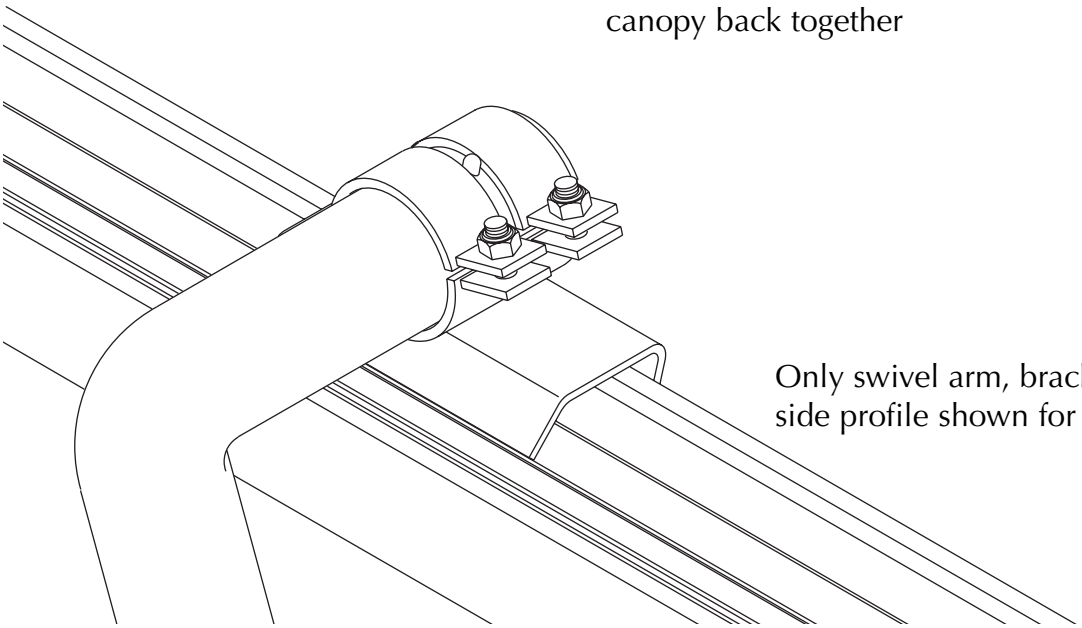

Only swivel arm, bracket and side profile shown for clarity.

Timer Maintenance

Your *SunQuest*® sun canopy is equipped with a backup shut-off timer which will automatically turn off the canopy in the unlikely event of a malfunction of the primary timer. This important safety feature also prevents the user from resetting the timer before the end of the preset maximum time interval. The electronic timer limiting circuit is automatically reset each time the primary timer is turned to the OFF position.

Annually, or whenever your unit is relamped, check the operation and accuracy of the timer system as follows. DO NOT perform these tests with a person under the canopy.

Step 1 Obtain an accurate watch capable of measuring in seconds. Set the timer to its maximum interval. Using the watch, time how long the lamps remain on. The lamps should shut off within plus or minus 10% of the maximum timer interval.

Step 2 Set the timer to the maximum time interval. Wait ten minutes, then turn the knob back to the maximum time position. The electronic time limiting circuit should turn the lamps off at an elapsed time equal to approximately 10% beyond the maximum timer interval, even though the primary timer continues to show time left.

Contact your place of purchase if your timer does not operate properly, or if you experience difficulty with these tests.

Troubleshooting

Problem	Solution
Lamps fail to light	1. Check source of AC power. Reset circuit breaker or replace fuse if necessary. 2. Make sure the unit is plugged into outlet. 3. Make sure timer dial is turned to a number past 0.
One or more lamps fail to light	1. Check that lamp is installed correctly. 2. Switch unlit lamp with a lamp that lights. If the new lamp lights and the old lamp still does not, replace old lamp. 3. If replacing lamp does not remedy problem, contact your service representative.
Canopy fails to stay in the up or down position	Gas springs should hold the canopy fully up as well as allow it to rest fully closed. If the canopy is left up for an extended period of time it may creep down. This is considered normal. Keep the canopy closed when not in use. Replace gas spring when it no longer has sufficient power to hold the canopy up when raised.
Sunbed does not stay lit	1. Check source of AC power. Reset circuit breaker or replace fuse if necessary. 2. Check timer system per maintenance instructions in this guide. Contact your service representative.

	2000S	3000S
Size	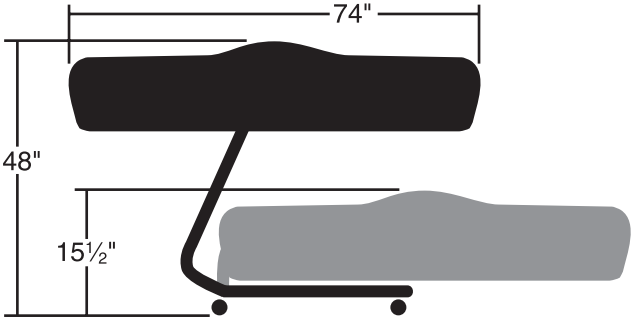	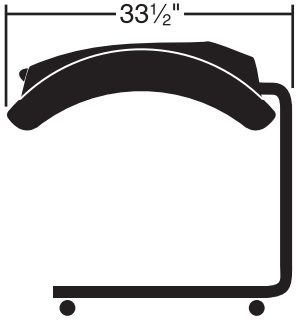
Weight (Pounds)	89	92
Electrical -		
Voltage (AC)	120	120
Amperage	10	13
Circuit Breaker (Amps)	15	20
Outlet (NEMA standard)	5-15R	5-20R
Main Lamps	GOLDEN TAN™ 100W	GOLDEN TAN™ 100W
Ballasts	100W Electronic	100W Electronic
Timer System	Electro-mechanical	Electro-mechanical
Max. Exposure Time	20minutes	20minutes
Back-up Timer	Redundant Solid-State	Redundant Solid-State

Record this information for ease of service:

Date of purchase: _____

Serial number: _____

CALL FOR SERVICE OR QUESTIONS:

1•800•449•3605

6270 Corporate Drive Indianapolis, IN 46278-2900