SunQuest®

Assembly And User Guide

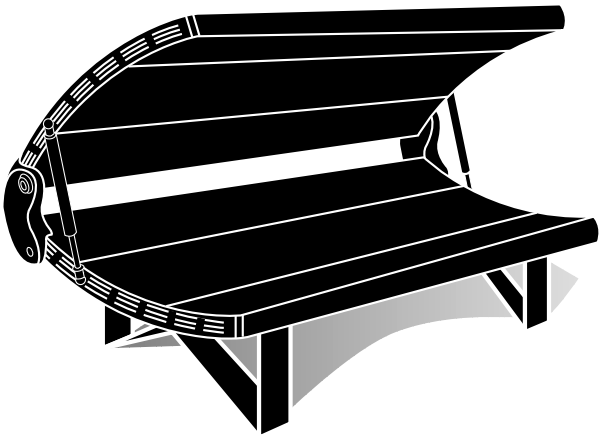

MODEL PRO 16SE

21163A

Lifetime Warranty

What Is Covered?

SunQuest warrants your tanning unit to be free of structural defects in its material and workmanship, under normal use, for its lifetime. *SunQuest* will repair or replace, at their discretion, any defect to the structure which affects the performance of the unit.

For 6 months from the date of purchase, *SunQuest* will provide replacements for parts that prove to be defective in material or workmanship. Acrylic shields, fluorescent lamps, and lamp starters are excluded from this warranty. Labor will be covered for 30 days from purchase date. Normal wear, damage from misuse or abuse, damage incurred in transit, or damage done by unauthorized repairs or modifications are not covered by this warranty.

How to Obtain Service

All warranty service must be performed by an authorized service person. If your tanning unit must be returned for service, all freight charges must be at your expense. Contact your place of purchase for the address of the *SunQuest* Service Center nearest you. Proof of purchase is required to obtain warranty service.

Other Provisions

This warranty covers the original purchaser only. This warranty is void if the unit is modified in any manner from its original design.

This warranty gives you specific legal rights, and you may also have other rights which may vary from state to state.

Welcome

Congratulations on your purchase of this technologically advanced sun tanning unit. It has been designed to provide years of dependable service for you.

Please read all the instructions in this booklet before installing and using the unit. Always be sure to observe all safety precautions.

Contents

Safety Information . . . . . *iii*

Installation **1**
- Unpacking and Inspection 1
- Tools Required 2
- Pre-Installation Planning 3
- Assembly Procedures 4
- Making Electrical Connections 9

Operation **10**
- Before You Tan 10
- Exposure Times 10
- Using Your Sunbed 11

Care and Maintenance **12**
- Cleaning After Use 12
- Thorough Periodic Cleaning 12
- Mechanical Inspection 12
- Replacing Lamps 13
- Timer Maintenance 15

Troubleshooting **16**

Obtaining Service **17**

Safety Information

LABELING NOTICE: Labels are affixed on all systems to inform the user of possible dangers. Regulations are stated in 21 CFR, Section 1040.20, and require that all products manufactured after September 8, 1986 which use sunlamps must display the following:

DANGER Ultraviolet radiation. Follow instructions. Avoid overexposure. As with natural sunlight, over-exposure can cause eye and skin injury and allergic reactions. Repeated exposure may cause premature aging of the skin and skin cancer. WEAR PROTECTIVE EYEWEAR; FAILURE TO MAY RESULT IN SEVERE BURNS OR LONGTERM INJURY TO THE EYES.

Medications or cosmetics may increase your sensitivity to the ultra-violet radiation. Consult physician before using sunlamp if you are using medications or have a history of skin problems or believe yourself especially sensitive to sunlight. If you do not tan in the sun, you are unlikely to tan from the use of this product.

Do not use without clear plastic panels (or wire grid for models using wire grid) in place. Tanning normally appears after the first few sessions and maximizes after approximately four weeks. Tan once or twice per week thereafter to maintain appearance. Frequency of sessions should be limited to every other day. Persons already having a base tan may begin at advanced levels corresponding to the extent of their base tan.

RECOMMENDED EXPOSURE TIMES IN MINUTES						MAXIMUM EXPOSURE TIME IS 30 MINUTES
Skin Type:	Week # Session #	Week 1 1st-3rd	Week 2 4th-6th	Week 3 7th-10th	Week 4 11th-13th	Subsequent Maximum
I Sensitive Skin	(Burns easily and severely and does not tan.)	NOT RECOMMENDED FOR TANNING				
II Light	(Burns easily and severely and tans minimally.)	6	12	18	24	30
III Normal	(Burns moderately and tans average.)	8	15	22	30	30
IV Dark	(Burns minimally, tans easily and above average.)	10	17	24	30	30

New lamps emit approximately 20% more UV during the first 50 hours of operation. Recommended tanning times should therefore be reduced by approximately 20% during that period.

WARNING: • Read the instructions booklet before using this sunlamp product. • To use, lie down under canopy and pull down as far as adjustment will allow. All persons in the room should wear protective eyewear when lamps are on. • Recommended eyewear: provided eyeshields (Lucas Products Super Sunnies or Intrexco No. 5635/1) or equivalent eyewear as defined under 21 CFR 1040.20. Other types of eyewear may not provide adequate protection. • Disconnect power cord before attempting to clean, relamp, or engage in the maintenance of this product.

ONLY THE FOLLOWING LAMPS HAVE BEEN CERTIFIED FOR USE IN THE MODEL PRO 16SE:

Velocity Wolff Model 71T12100W
Diamond Sun S Wolff Model 71T12100W

THIS EQUIPMENT MUST BE CONNECTED TO A GROUNDED OUTLET.
THIS PRODUCT IS IN CONFORMITY WITH PERFORMANCE STANDARDS FOR SUN LAMP PRODUCTS UNDER 21 CFR PART 1040.20

Installation

Unpacking and Inspection

Your sunbed comes in two cardboard cartons, one for the bench and one for the canopy or top deck. Open the cartons and remove the bench and canopy as follows.

The bench and canopy are each wrapped in plastic. With a helper, grasp the bench and pull it from the carton bottom, leaving the plastic wrap and the carton packaging. Do the same for the canopy.

Note! The cartons are reusable, in the unlikely event that you may find it necessary to return your sunbed.

The canopy box contains the canopy unit and a pair of gas springs. The bench box contains the following items:

- Bench Unit
- Box containing necessary assembly hardware, safety goggles, and pillow
- Box containing two leg stands
- Assembly and User Guide

Inspect these items, including the canopy and bench, and make sure they are free from any visible damage. Report the extent of any damage to the transportation company.

Record the serial numbers of the canopy and bench in the area provided on the back page of this manual. This information will be required whenever you call customer service.

Tools Required

You'll need the following tools to assemble your sunbed:

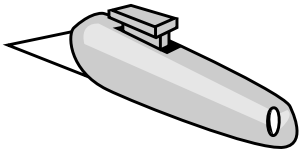

Utility Knife

Allen Wrench
(Supplied in Hardware Box)

Pre-Installation Planning

Before you begin to assemble your sunbed, you should observe the following pre-installation considerations.

• Your sunbed operates from a 120V ac source. You should have a NEMA 5-20R electrical outlet (like the type shown below) installed in the room in which you will use the unit. The outlet should be on a dedicated circuit capable of providing 20 Amp service. (We recommend installation by a professional electrician.) The outlet must be earth grounded.

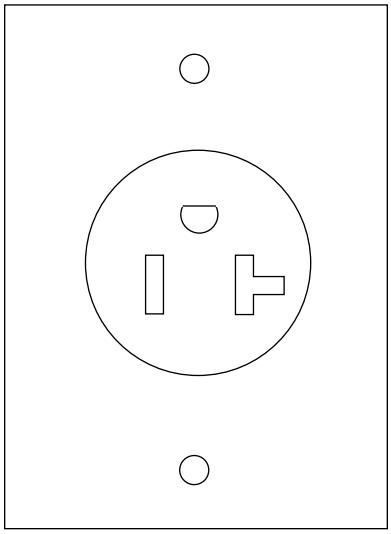

20 AMP NEMA #5-20R RECEPTACLE

• Make sure the room in which you intend to use your sunbed is well ventilated. Air from the room is used to cool the sunbed, and a poorly ventilated room may cause the unit to become hot and cause discomfort to the user.

• Your sunbed is designed to operate in an ambient room temperature of 80°F maximum and 70% relative humidity.

• Place your sunbed no closer than 6" from any wall. Make sure that curtains, drapes, and other room furniture do not obstruct the airflow into the end caps or out of the fan opening areas.

• Proper assembly of your sunbed requires three people. Plan to have a couple of helpers assist you.

Assembly Procedures

Hardware Inventory

Before you begin, use the utility knife to cut open the Hardware Box and remove the small bag of hardware. In addition to a small allen wrench and pillow, make sure you have the following hardware items.

Allen-Head Bolt 5/16" x 1" - Quantity 8
(6 bolts may be pre-installed in bench bottom)

Bushing - Quantity 2

5/16" Metal Washer - Quantity 2

5/16" Metal Washer - Quantity 6
(May be pre-installed in bench bottom.)

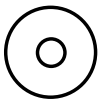

Nylon Washer - Quantity 2

Phillips or Allen Head Bolt 5/16" x 1 1/2" - Quantity 2

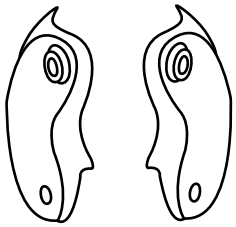

Hinge Brackets - Quantity 2

Safety Goggles - Quantity 1

Attaching Legs to Bench

Lay the bench upside down on the floor. Locate the two legs and attach to the bench as shown below.

1. Using the 5/16" x 1 1/2" bolts and the six larger sized 5/16" washers, attach the legs with the skirt mounting holes toward the back of the bed as shown. Install center bolt first. You may have to gently push sides of legs in to align holes. Tighten with allen wrench.

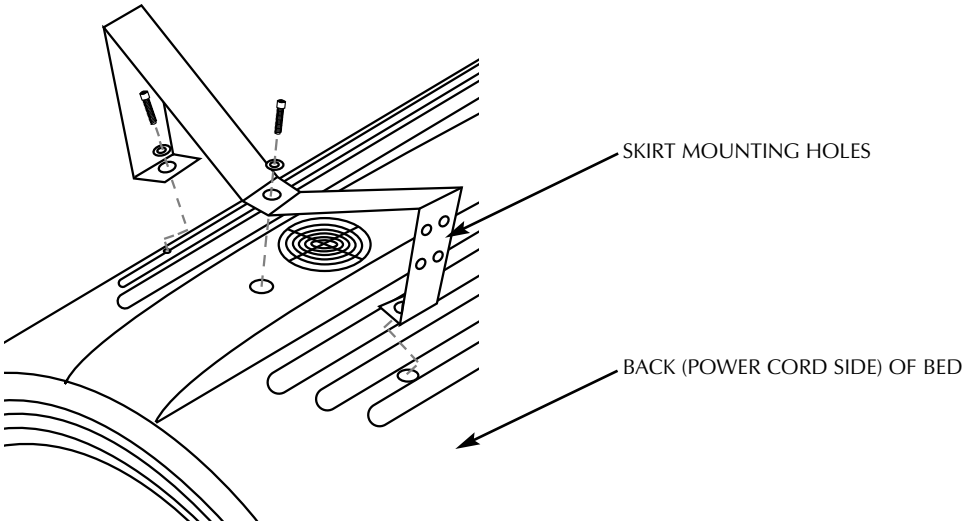

2. Turn bench right side up on floor. Place so that power cord connector is facing toward wall outlet.

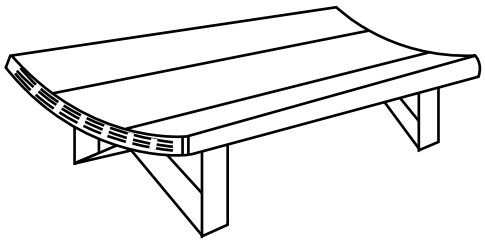

Attaching Hinge Brackets to Bench

Locate the two hinge brackets and attach to the bench as shown below.

1. Install the hinge bracket to the end of the bed such that the two bosses engage, then secure using the 5/16" x 1" allen-head bolt and 5/16" metal washer. Tighten bolt snug, then an additional half turn. Repeat for the other hinge bracket

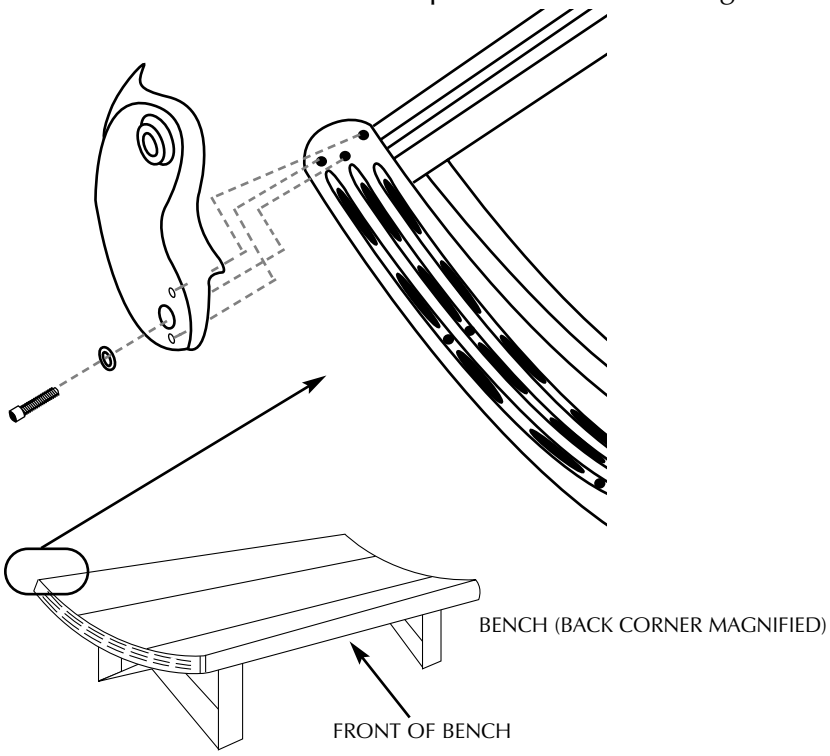

2. Place the bushings into the hinge brackets as shown below.

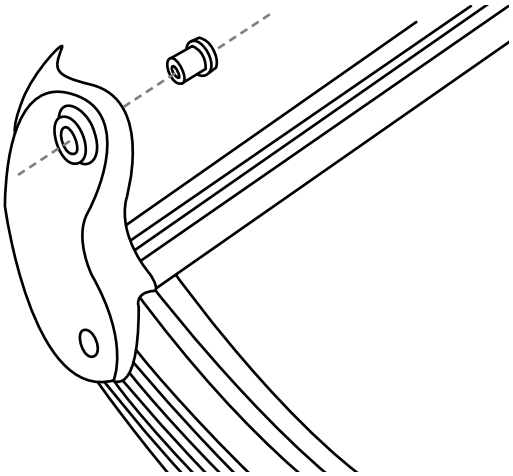

Attaching Canopy to Bench

Attach the canopy to the bench as shown below. This will require at least two people.

1. Lift the canopy and hold it between the hinge brackets.

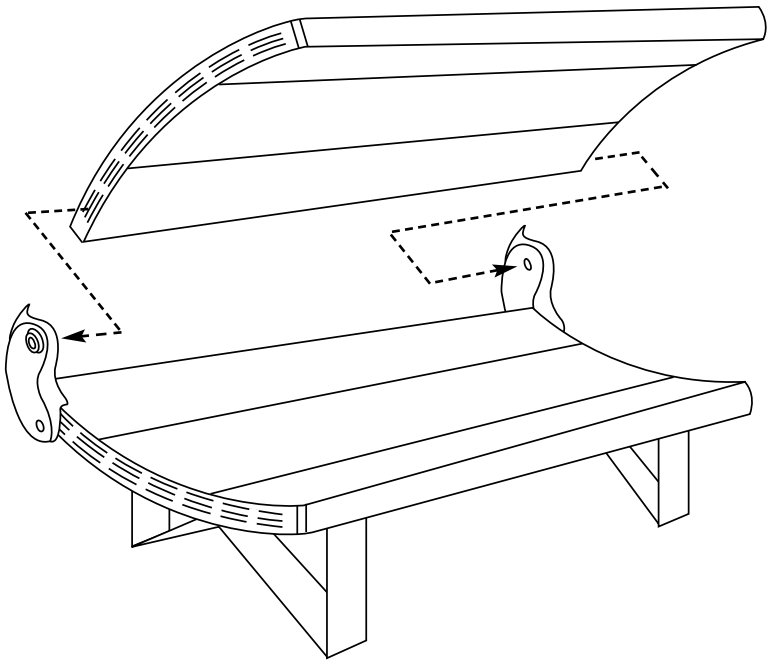

2. Insert the 5/16" x 1 1/2" bolts with the nylon washers into both hinge brackets. Tighten bolts into the endcap threaded inserts until snug, then an additional half turn. Do not overtighten to avoid damaging threaded inserts.

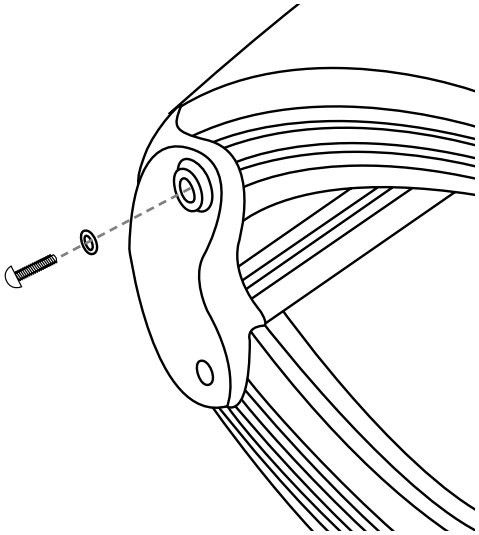

Attaching Gas Springs

Attach the gas springs (located in canopy box) between the canopy and the bench as shown below. You will need another person to help you lift the canopy.

1. With a helper holding the canopy open, align open ends of gas spring ball joints with pivot studs and push into place. Be sure spring cylinder is in up position as shown. Repeat on other side. DO NOT lower canopy until both gas springs are installed!

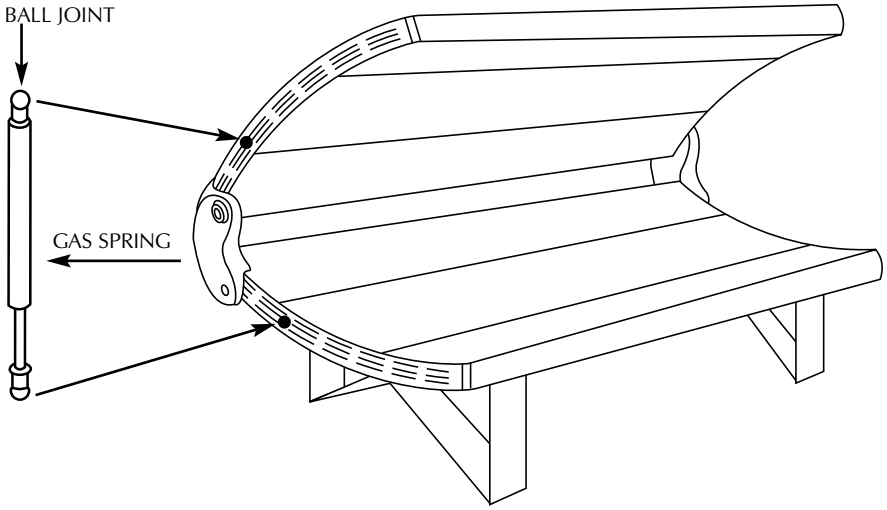

Making Electrical Connections

Make electrical connections as shown below.

Warning! Be sure ac power is disconnected before connecting cables.

1. Connect the canopy to bench power cord to the bench receptacle. The plug is polarized. Align the terminals and firmly push on until seated then tighten the threaded locking ring, as shown.

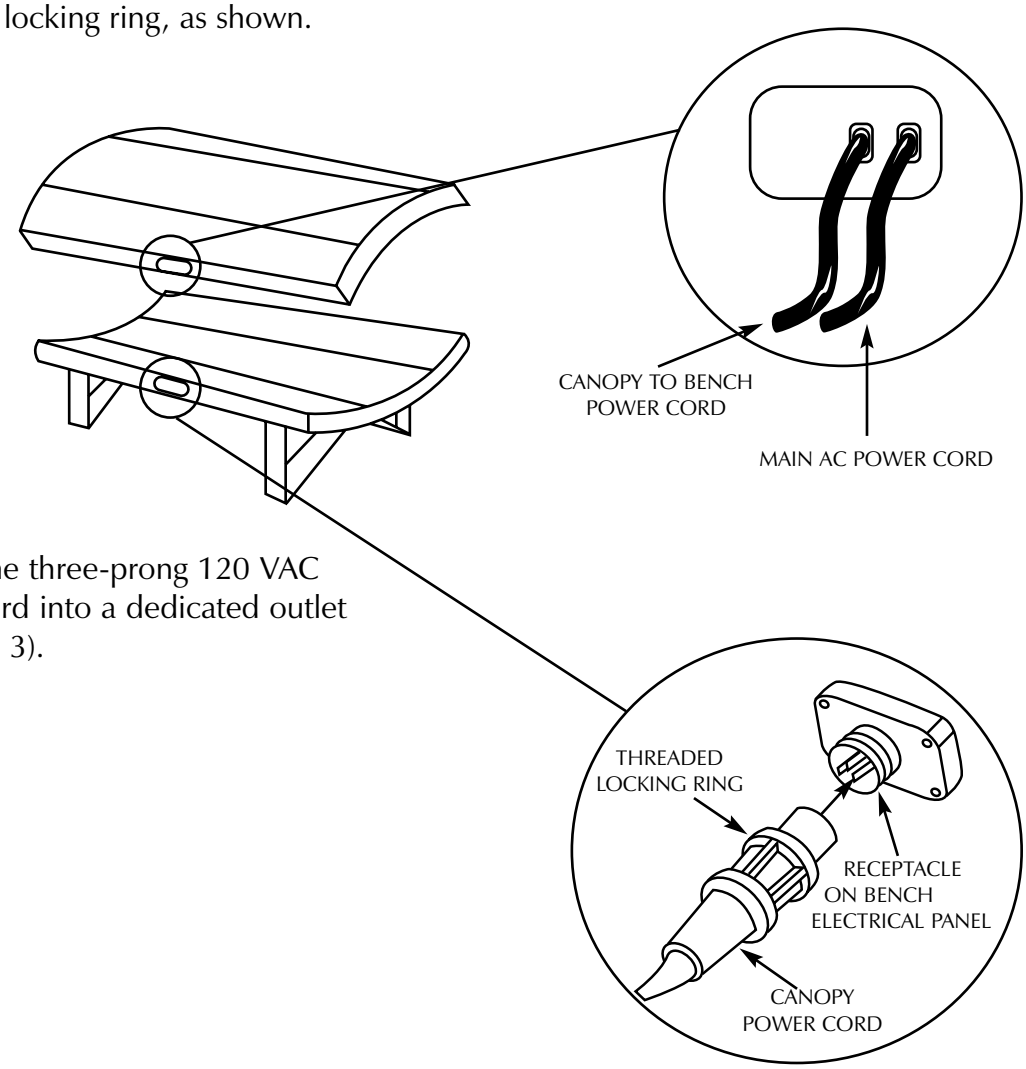

2. Plug the three-prong 120 VAC power cord into a dedicated outlet (see page 3).

Operation

Before You Tan

Before using your sunbed, please note the following important precautions:

• Your skin should be free of cosmetics, tanning oils, or other body lotions prior to tanning except for those specifically made for use with tanning devices. However, do not remove natural body oils by bathing or showering immediately before tanning.

• Your hair should be free of gels, mousses, sprays, or other hair products prior to tanning. These products can cause damage to the sunbed acrylic. As an alternative, a shower cap or towel can be worn to keep treated hair away from the sunbed surfaces.

• Some medication may **increase your sensitivity** to ultraviolet light. It is recommended that you consult a physician before using this sunbed if taking any medication or if you suspect that your skin might be especially sensitive to sunlight. Included with this manual is an FDA booklet on medications that increase sensitivity to light.

• As with all electrical appliances, **do not operate this device near water or while you are wet.**

Exposure Times

We recommend that you tan every other day, following the tanning times in the exposure schedule. Tanning normally appears after the first few sessions and maximizes after approximately four weeks. Tan once or twice per week thereafter to maintain appearance. Persons already having a base tan may begin at advanced levels corresponding to the extent of their base tan.

Follow the guidelines for skin type and exposure times as shown in the table below.

RECOMMENDED EXPOSURE TIMES IN MINUTES						MAXIMUM EXPOSURE TIME IS 30 MINUTES
Skin Type:		Week # Session #	Week 1 1st-3rd	Week 2 4th-6th	Week 3 7th-10th	Week 4 11th-13th	Subsequent Maximum
I Sensitive Skin	(Burns easily and severely and does not tan.)		NOT RECOMMENDED FOR TANNING				
II Light	(Burns easily and severely and tans minimally.)		6	12	18	24	30
III Normal	(Burns moderately and tans average.)		8	15	22	30	30
IV Dark	(Burns minimally, tans easily and above average.)		10	17	24	30	30

Using Your Sunbed

Once you have read *Before You Tan* and *Exposure Times*, you are ready to use your sunbed. Proceed as follows.

WARNING! Your sunbed is designed for invividual use. Only one pair of protecive goggles is provided. ***Always*** wear these or another approved pair of goggles. You should never look at the lamps when turned on without wearing the appropriate protective goggles. Regular sunglasses **do not** provide adequate protection from ultra-violet light.

Step 1. Set the timer to the desired number of minutes (after first determining the proper time period from the table on page 10). The lamps will turn on as soon as you move the rotary dial from the "0" position.

Step 2. Lift the canopy, lie down on the bench (face up), and lower the canopy toward your body. For best results, position the canopy as close as possible to your body.

Step 3. When the timer reaches 0, the lamps will automatically turn off.

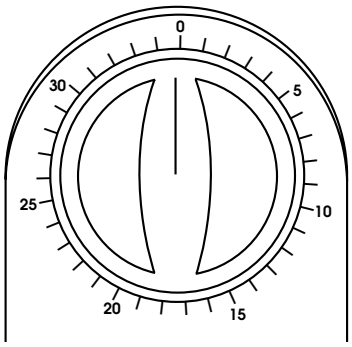

Care & Maintenance

Cleaning After Use

Clean and disinfect your tanning bed's bench and canopy after each use. Use a non-abrasive disinfectant cleaner that **does not contain ammonia or ammonia derivatives**. Ammonia may damage the acrylic shield. Spray the acrylic lightly with disinfectant and wipe dry with a clean soft cloth. We recommend *SunQuest* disinfectant and *SunQuest* acrylic cleaner.

Thorough Periodic Cleaning

Introduction

The cooling fans draw air through the bed and over time will cause a dust buildup on the lamps and reflectors. This will reduce the tanning effectiveness of the bed. When a dust buildup is observed, it is necessary to thoroughly clean the inside of the bench and canopy. **Warning!** Disconnect sunbed from electrical power before cleaning.

Cleaning the Canopy and Bench

Step 1. Remove the acrylic shields and lamps as described on page 13.
Step 2. With a soft cloth, wipe the entire length of each lamp to remove any film build-up.
Step 3. Clean both sides of the acrylic shields with a non-ammonia disinfectant cleaner.
Step 4. Wipe the reflectors with a clean damp cloth.
Step 5. Re-install the lamps and acrylic shields as described on pages 13-14.

Mechanical Inspection

Your tanning bed has been built for years of service. To ensure trouble free operation throughout its life, inspect the unit's mechanical integrity every 400-500 hours of use.

- Inspect the unit's fasteners verifying that all are firmly in place. Pay particular attention to the hinge bolts.
- Inspect gas springs for signs of wear. Gas springs that will not hold up the canopy in the full open position should be immediately replaced.
- Inspect the timer as indicated in this manual under *Timer Maintenance*.
- Inspect the AC power cord and its connections.
- Inspect the acrylic. Broken, cracked or badly scratched acrylics should be immediately replaced.

Replacing Lamps

Introduction

To be assured of maximum tanning effectiveness, change lamps after approximately 800-1000 hours of use. Tanning will continue after this time but at a slower rate. To ensure trouble-free operation of your sunbed, replace the lamp starters whenever the lamps are replaced.

Warning! Disconnect sunbed from electrical power before servicing.

Removing/Replacing Acrylic Shields

The acrylic shields in the canopy and bench are both secured in place by vinyl retainer strips which run the length of the canopy and bench, both front and back. To remove the retainers, gently pry up on the outside edge of the retainer near the middle of the bed with a screwdriver until the retainer releases its latching action (See figure below). Continue prying up the retainer throughout its full length until removed. Repeat for the other retainer. The long edges of the acrylic shield are now exposed.

Canopy Shield
Standing in front of the sunbed, grasp the long exposed edge of the acrylic and carefully begin sliding it toward you, until it is removed from the sunbed.

Bench Shield
Slide the acrylic shield toward the head or foot end of the bed. The short edge of the acrylic shield at the opposite end should now be visible. Remove the shield by lifting from this end.

After changing lamps, replace the acrylic shield by reversing the above steps. **On bench shields, take special care to ensure that the acrylic is centered from head to foot before installing the retaining strips.** Replace each retainer by first installing its ends into place under the endcaps, then working toward the center, push it into place.

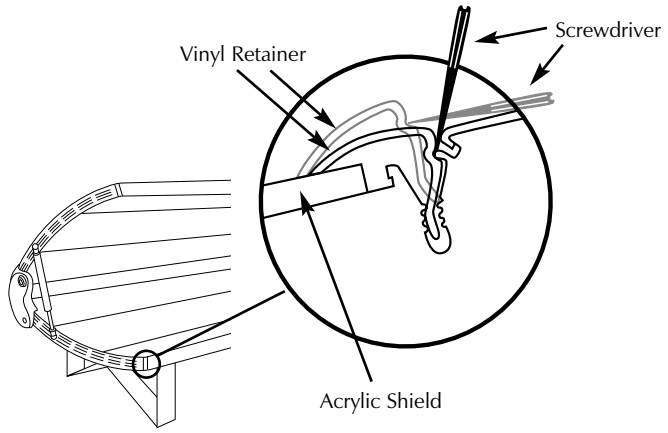

Removing/Replacing Lamps

After removing the acrylic shield, replace lamps as follows:

Step 1. Grasp the lamp at one end and at the middle, then turn the lamp a quarter turn. The lamp may then be gently removed from its holder.

Step 2. To re-install a lamp, insert the pins located on the ends of the lamp into the slots on top of the lamp holder and turn the lamp a quarter turn.

Recommended Replacement Lamps

Do not use lamps other than those specified below. Doing so is a violation of Federal regulations and will void your warranty. These lamps have an average life span of 800-1000 hours of effective tanning use. Lamps used longer than that begin to lose their effectiveness even though they will continue to light.

Pro 16SE

*Only the following lamp types have been certified for use in **SunQuest** Solariums*

Application	Lamp Model Number
Canopy and Bench	Velocity Wolff Model 71T12100W Diamond Sun S Wolff Model 71T12100W

Timer Maintenance

Your *SunQuest* sunbed is equipped with a backup shut-off timer which will automatically turn off the sunbed in the unlikely event of a malfunction of the primary timer. This important safety feature also prevents the user from re-setting the timer before the end of the pre-set maximum time interval. The electronic timer limiting circuit is automatically reset each time the primary timer is turned to the OFF position.

Annually, or whenever your sunbed is re-lamped, check the operation and accuracy of the timer system as follows. DO NOT perform these tests with a person in the sunbed.

Step 1. Obtain an accurate watch capable of measuring in seconds. Set the timer to its maximum interval. Using the watch, time how long the lamps remain on. The lamps should shut off within plus or minus 10% of the maximum timer interval.

Step 2. Set the timer to the maximum time interval. Wait ten minutes, then turn the knob back to the maximum time position. The electronic time limiting circuit should turn the lamps off at an elapsed time equal to approximately 10% beyond the maximum timer interval, even though the primary timer continues to show time left.

Call ETS Customer Service if your timer does not operate properly, or if you experience difficulty with these tests.

Troubleshooting

Problem/Solution Chart

Problem	Solution
Lamps fail to light	1. Check source of ac power. Reset circuit breaker or replace fuse if necessary. 2. Make sure the unit is plugged into outlet. 3. Make sure cord between canopy and bench is properly connected. 4. Make sure timer dial is turned to a number past 0.
One or more lamps fail to light	1. Check that lamp is installed correctly. 2. Switch unlit lamp with a lamp that lights. If the new lamp lights and the old lamp still does not, replace old lamp. 3. If replacing lamp does not remedy problem, contact your service representative.
Canopy fails to stay in the up or down position	1. Replace gas springs when they no longer have sufficient power to aid in lifting the canopy.
Sunbed does not stay lit	1. Check source of ac power. Reset circuit breaker or replace fuse if necessary. 2. Check timer system per maintenance instructions in this guide. Contact your local service representative.

Obtaining Service

To arrange for service, or for more information about your sunbed, contact ETS as follows:

CALL FOR SERVICE OR QUESTIONS:
1•800•228•6292

ETS inc.

6270 Corporate Drive
Indianapolis, IN 46278-2900

Have the following information ready when calling ETS to order parts or service for your bed:

Date Purchased_____
Canopy Serial Number_____
Bench Serial Number_____

Manufactured for SunQuest by:
Spectrum Products, Inc.
6220 Churchman Bypass
Indianapolis, Indiana 46203